bulletin 48

guide to good practice

Formwork and falsework

for heavy construction

Formwork and falsework

for heavy construction

Guide to good practice prepared by

Task Group 10.2

January 2009

Subject to priorities defined by the Technical Council and the Presidium, the results of ***fib***'s work in Commissions and Task Groups are published in a continuously numbered series of technical publications called 'Bulletins'. The following categories are used:

category	minimum approval procedure required prior to publication
Technical Report	approved by a Task Group and the Chairpersons of the Commission
State-of-Art Report	approved by a Commission
Manual, Guide (to good practice) or Recommendation	approved by the Technical Council of ***fib***
Model Code	approved by the General Assembly of ***fib***

Any publication not having met the above requirements will be clearly identified as preliminary draft.

This Bulletin N° 48 was approved as an ***fib*** Guide to good practice by the Technical Council of ***fib*** in May 2008.

This report was drafted by Task Group 10.2, *Formwork and falsework*, within Commission 10, *Construction*:

Philippe Jacquet (Convener, Bouygues Travaux Publics, France)

Jean Davy (Bouygues Travaux Publics, France), J. Emilio Herrero (editor of the report, Ferrovial–Agroman, Spain), Aad van der Horst (BAM Infraconsult bv/Delta Marine Consultants, The Netherlands), Florent Imberty (SETRA, France), Patrice Schmitt (SNCF/IGOA, France)

Non-TG 10.2 members who contributed to this report:

Manuel Contreras (Ferrovial-Agroman, Spain), Stuart Curtis (RTR Bridge Construction Services, Australia), Jesus Gonzalez (Ferrovial-Agroman, USA), Alexandru Neagoe (Ferrovial-Agroman, USA), Bob Normand (Delta Marine Consultants, The Netherlands), Daniel Tassin (International Bridge Technologies, USA), Godfrey Webster (Owen Williams Ltd.-Amey, UK)

Full address details of Task Group members may be found in the ***fib*** Directory or through the online services on ***fib's*** website, www.fib-international.org.

Cover image: Underslung traveller for span-by-span construction process (movable shuttering system), Anchuelo viaduct high-speed railway Madrid-Barcelona (Spain).

© fédération internationale du béton (***fib***), 2009

Although the International Federation for Structural Concrete ***fib*** – fédération internationale du béton – does its best to ensure that any information given is accurate, no liability or responsibility of any kind (including liability for negligence) is accepted in this respect by the organisation, its members, servants or agents.

All rights reserved. No part of this publication may be reproduced, modified, translated, stored in a retrieval system, or transmitted in any form or by any means, electronic, mechanical, photocopying, recording, or otherwise, without prior written permission from ***fib***.

First published in 2009 by the International Federation for Structural Concrete (*fib*)
Postal address: Case Postale 88, CH-1015 Lausanne, Switzerland
Street address: Federal Institute of Technology Lausanne - EPFL, Section Génie Civil
Tel +41 21 693 2747 • Fax +41 21 693 6245
fib@epfl.ch • www.fib-international.org

ISSN 1562-3610
ISBN 978-2-88394-088-8

Printed by DCC Document Competence Center Siegmar Kästl e.K., Germany

Copyright fib, all rights reserved. This PDF copy of fib Bulletin 48 is intended for use and/or distribution only within National Member Groups of fib.

Foreword

The realization process of civil engineering structures is complicated: a wide variety of disciplines is involved, each with a specific contribution, and each involved somewhere between initial concept and completion. It is a challenge to structure the process in such a way that a balanced and optimized participation of the many disciplines involved is achieved. One of the critical success factors is knowledge management: each discipline should bring professional knowledge, but disciplines should interact effectively at interfaces as well. And that is where the gap in practice often appears. Temporary structures for civil engineering projects are an example of this phenomenon; they are right in the middle of a complex system of interactions: between structural engineering, site engineering, work preparation, procurement, and execution. They have a significant impact on cost, construction time, construction methodology and through-life performance of the actual, permanent structure. Formwork and falsework are among the most important elements of temporary structures for civil engineering projects. And so is the interaction with the many disciplines mentioned before. Knowledge management with respect to formwork and falsework requires engineers to share knowledge and experience in the broadest sense. As actual performance of formwork and falsework can only be noted at a late stage in the realization process when some disciplines (although in strong interaction with formwork and falsework) are no longer present, the learning circle can only be closed by feedback. And that is where also a gap appears in practice: as experienced site managers generally know what kind of problems they will face and how to solve them and most site engineers have their lessons learned, it is not common to prepare documents which address practical construction issues in relation to design and application of formwork and falsework, although these documents are a vital link in the learning cycle. Moreover it is not common to include the participation of technical commissions and/or scientific associations in these issues

This ***fib*** bulletin intends to feedback effectively state of the art knowledge and experience with regard to formwork and falsework. As such it hopes to bridge the gap that often is experienced in practice and to make a larger group of engineers familiar with the important issues related to design and application of formwork and falsework. This should lead to a better interaction between engineering disciplines involved, resulting in safe, effective and efficient temporary structures.

Although commonly applied definitions for formwork and falsework have been used, the authors are aware of the fact that in practice a clear distinction between both elements (form and support) may be difficult as both functions are sometimes integrated.

This document addresses some fundamental issues related to formwork and falsework:

- The appearance of the finished concrete which is closely related with the quality of the formwork. Owners/clients tend to be more demanding in this respect.
- The performance of the finished concrete in related to durability and as part of Life Cycle Management. A stronger focus on reliability of (life cycle) performance is noticeable (performance-based building, integrated contracts, through life analysis, etc.).
- The need to support the concrete while it acquires enough strength and stiffness to support itself. In this context the most important issue is structural safety. Around the world, serious accidents of important civil structures and buildings under construction happened with catastrophic consequences caused by temporary work failure. Accidents during construction are too frequent and society does not accept that exposure anymore. Unfortunately there is a lack of documentation about these events.

Copyright fib, all rights reserved. This PDF copy of fib Bulletin 48 is intended for use and/or distribution only within National Member Groups of fib.

This bulletin gives guidance for the design and use of formwork and falsework on construction sites. These guidelines are based on the experience of site and design engineers; and most of the advice has been given as a consequence of real problems in the past. Any warnings based solely on theoretical judgement have been avoided; only recommendations based on experience have been included.

This bulletin focuses on principles only and as such does not address detailed design issues, as local design codes should be applied. As construction habits and details sometimes differ from country to country, some advice or recommendations included in this document may be affected by local circumstances.

This Guide to Good Practice represents a summary of the relevant knowledge available to and possessed by the members of Task Group 10.2, and other contributors as listed. The draft report has been discussed and approved by Commission 10 and subsequently released for approval by the Technical Council of ***fib***. Formal approval by the Technical Council of ***fib*** was given in May 2008.

I would like to thank all the members of Task Group 10.2 and Commission 10, all the individual contributors from outside Commission 10, and the reviewers of the Technical Council of ***fib*** for their contribution to this Guide to Good Practice. In particular, I would like to thank José Emilio Herrero Beneítez, who, apart from his own contribution, did the editorial work for this bulletin.

Prof. Aad van der Horst

Chair of ***fib*** Commission 10

Copyright fib, all rights reserved. This PDF copy of fib Bulletin 48 is intended for use and/or distribution only within National Member Groups of fib.

Contents

1 Scope **1**

2 Definitions **1**

3 General requirements **5**

3.1 General introduction 5

3.2 Formwork 6

(3.2.1 Quality of formwork sheeting – 3.2.2 Rigidity (stiffness formwork) – 3.2.3 Watertightness – 3.2.4 Stability – 3.2.5 Additional equipment (furnishings))

3.3 Falsework and centring 11

(3.3.1 General requirements – 3.3.2 Specific requirements)

3.4 Scaffoldings 14

(3.4.1 Quality of materials – 3.4.2 Rigidity – 3.4.3 Stability)

4 Design considerations **15**

4.1 Management of the design 15

4.2 Design criteria 15

(4.2.1 Structural design project – 4.2.2 Designing by tests – 4.2.3 Loads and combinations – 4.2.4 Eccentricity of loads – 4.2.5 Connections and details – 4.2.6 Support settlement – 4.2.7 Foundations – 4.2.8 Ultimate stability and redundancy – 4.2.9 Re-use of elements – 4.2.10 Loads due to striking: interaction between structure and formwork – 4.2.11 Deflections)

5 Control aspects **18**

5.1 Design control 18

5.2 Erection control 18

5.3 Foundation control 18

6 Different types of formwork **19**

6.1 Traditional formwork (fabricated in timber) 19

6.2 Proprietary formworks 19

(6.2.1 Formwork panel – 6.2.2 Climbing form – 6.2.3 Slip form)

7 Specialized formwork/falsework/centrings **29**

7.1 Specially manufactured forms 29

7.2 Bridge shoring 29

(7.2.1 Definition – 7.2.2 Recommendations for design – 7.2.3 Specific recommendations for each shoring element – 7.2.4 Recommendations for site work – 7.2.5 Recommendations for formwork striking)

7.3 Travelling formwork – General aspects 36

(7.3.1 Definition – 7.3.2 Recommendations for design – 7.3.3 Recommendations for site work – 7.3.4 Recommendations for striking and dismantling)

7.4 Travelling formwork for deck slabs 39

(7.4.1 Definition – 7.4.2 Recommendations for design – 7.4.3 Recommendations for site work – 7.4.4 Recommendations for striking and dismantling)

Copyright fib, all rights reserved. This PDF copy of fib Bulletin 48 is intended for use and/or distribution only within National Member Groups of fib.

7.5 Tunnel vault formwork 41
(7.5.1 Definition – 7.5.2 Recommendations for design – 7.5.3 Recommendations for site work – 7.5.4 Recommendations for striking and dismantling)

7.6 Travelling formwork – Movable shuttering system 44
(7.6.1 Definition – 7.6.2 Recommendations for design – 7.6.3 Recommendations for site work – 7.6.4 Recommendations for striking and dismantling)

7.7 Travelling formwork for balance cantilever bridge construction 54
(7.7.1 Definition – 7.7.2 Recommendations for design – 7.7.3 Recommendations for site work – 7.7.4 Recommendations for striking and movement situation)

7.8 Apartment formwork 62
(7.8.1 Definition – 7.8.2 Recommendations for design – 7.8.3 Recommendations for site work – 7.8.4 Recommendations for striking)

7.9 Self-launching gantries 67
(7.9.1 Definition – 7.9.2 Recommendations for Design – 7.9.3 Recommendations for site work)

7.10 Ready-for-use falseworks 70
(7.10.1 Definition)

7.11 Heavy duty towers 71
(7.11.1 Definition – 7.11.2 Description – 7.11.3 Recommendations for design – 7.11.4 Recommendations for site work – 7.11.5 Recommendations for striking – 7.11.6 Collection of Details)

7.12 Sacrificial formworks 78
(7.12.1 Definition – 7.12.2 Specific recommendations)

Appendix A Calculation of fresh concrete pressure 79

A.1 Factors of determination of concrete pressure 80
(A.1.1 Filling speed of pouring the fresh concrete – A.1.2 Hardening temperature – A.1.3 Workability of fresh concrete (Abraham cone) – A.1.4 Slope of the formwork face – A.1.5 Vibration depth – A.1.6 Vibration frequency – A.1.7 Cement proportion – A.1.8 Additives)

A.2 Theories of fresh concrete pressure on the formwork 82
(A.2.1 American code A.C.I. 347/04 – A.2.2 German norm DIN 18218 – A.2.3 Recommendation of the Spanish: “Instituto Eduardo Torroja” – A.2.4 Study of N.J. Garner)

A.3 Fresh concrete pressure for SCC 88

Bibliography 89

Copyright fib, all rights reserved. This PDF copy of fib Bulletin 48 is intended for use and/or distribution only within National Member Groups of fib.

1 Scope

This ***fib*** Guide to Good Practice presents an overview of formwork and falsework techniques and addresses issues related to the design and application thereof. As such, its objective is to provide both structural engineers as well as site engineers with information to design and apply formwork and falsework in a safe, reliable, and economic way.

Chapter 2 presents definitions. Although it is appreciated that different definitions may be in use around the globe, it was felt necessary to start with definitions as used in this report. As a basis for definitions British Standards were used. In addition, a list of definitions as used by the authors is included.

Chapter 3 addresses general requirements with due attention to safety, durability and quality of the finished surface. Specific requirements for formwork, falsework, centring and scaffolding are presented in separate sections of chapter 3.

Chapter 4 covers design considerations in a broader context. Management and control addresses issues related to coordination between disciplines, safety aspects and classification of temporary structures. The design criteria section addresses fundamental issues related to structural scheme, load path analysis, design strategies, including design by testing, eccentricities, deflections, connections, foundations and settlements, redundancy and the striking of formwork and falsework.

Chapter 5 briefly addresses control issues related to design, erection and the foundation.

Chapter 6 gives a general overview of different types of formwork: traditional formwork, panels, climbing formwork and slipforming. Apart from the descriptions, also recommendations have been given both for design, site works, and disassembly.

Chapter 7 is an extensive part of the report and deals with specialized formwork, falsework and centrings. Both fixed structures as well as travellers are presented. Although a strong focus is on bridges, also tunnel vault formwork and apartment formwork has been included. Each section contains specific definitions and recommendations for design, site works and striking.

Appendix A deals with fresh concrete pressures and gives an overview of governing factors, theories and codes.

The guide concludes with a Bibliography.

2 Definitions

Formwork: (according to BS 6100-6.5): The section of the temporary works used to give the required shape and to support the fresh concrete. It consists of sheathing materials (e.g. wood, plywood, metal sheet or plastic sheet) in direct contact with the concrete, and joists or stringers that directly support the sheathing.

Falsework: (according to BS 5975): Any temporary structure used to support a permanent structure while it is not self-supporting.

Copyright fib, all rights reserved. This PDF copy of fib Bulletin 48 is intended for use and/or distribution only within National Member Groups of fib.

Some equipment items are used as both falsework and formwork. In this chapter these have been classified according to their main function. In any case, requirements and recommendations should be applied according to the type of work to accomplish for each part of the equipment.

Scaffold: (according to BS 5973, 3.1.14): A temporary structure which provides access, or on or from which persons work, or which is used to support materials, plant or equipment.

Centring: (according to BS 5975, 6.6.3): Falsework for arches has traditionally been known as centring, although this term is more usually used when the falsework takes the form of near radial props from a few levels below.

Others definitions from BS 5975 are:

Baseplate: A metal plate with a spigot for distributing the load from a standard, raker or other load-bearing member.

Bay length: The distance between the centres of two adjacent standards measured horizontally.

Blinding: A layer of lean concrete usually 50 mm to 100 mm thick, put down on soil such as clay to seal the ground and provide a clean bed for construction work.

Brace: A tube placed diagonally with respect to the vertical or horizontal members of a scaffold and fixed to them to afford stability.

Camber: The intentional curvature of a beam or formwork, either formed initially to compensate for subsequent deflection under load, or produced as a permanent effect for aesthetic reasons.

Coupler: A component used to fix scaffold tubes together.

Erection drawing: A drawing prepared prior to erection showing the arrangement and details of the falsework structure.

Floor centre: A beam of adjustable length, usually a metal lattice or sheet metal box beam, used to support decking for a floor slab.

Fork head: A U-shaped housing used to support joists or the like.

Foot tie: A member close to the ground, stabilizing two or more standards.

Frame: The principal panel unit of a prefabricated falsework structure formed from welded, bolted or clamped tubular or rolled steel sections.

Guard rail: A member incorporated in a structure to prevent the fall of a person from a platform or access way.

Joint pin: An expanding fitting placed in the bore of a tube to connect one tube to another coaxially.

Joist: A horizontal or sloping beam, e.g. the horizontal timbers that carry decking for a suspended concrete slab.

Copyright fib, all rights reserved. This PDF copy of fib Bulletin 48 is intended for use and/or distribution only within National Member Groups of fib.

Lacing: Essentially horizontal members that connect together and reduce the unsupported length of columns.

Permissible stress: The stress that can be sustained with acceptable safety by a structural component under the particular condition of service or loading.

Permit to load: A certificate issued to indicate that the falsework may safely be put to its designed use.

Prop: A compression member used as a temporary support and incorporating a means for varying and fixing its length.

Repropping: A system used during the construction operation in which the original props are removed and replaced in a sequence planned to avoid any damage to partially cured concrete.

Safety factor: The ratio of ultimate load to the maximum working load.

Sole plate (or sill): A timber, concrete or metal spreader used to distribute the load from a standard or baseplate to the ground.

Spigot pin: A pin placed transversely through the spigot and the scaffold tube or frame to prevent the two from coming apart.

Standard: A vertical or near vertical tube.

Stiff length (of the bearing): The length of the bearing that cannot deform appreciably in bending.

Strut: A member in compression.

Toe board: An upstand at the edge of a platform intended to prevent materials or operatives' feet from slipping off the platform.

Tower: A tall composite structure, used principally to carry vertical loading.

Wedge: A piece of strong timber or metal that tapers in its length and is used to adjust elevation or line or to tighten falsework. Folding wedges comprise a pair of wedges laid one above the other so that their outer faces are parallel.

Other terms:

Beam vibrator: A device used to compact concrete slabs.

Clamp-on vibrator: A vibrator fixed to the formwork.

Cold joint or day joint: The intersection between the end of one concrete pour and the beginning of a new pour. It is a weak area and could allow the ingress of water.

Concrete heap: Heap produced when the concrete is poured with a small slump.

Entrapped air: Air inside the mix as a consequence of a bad compacting process.

Copyright fib, all rights reserved. This PDF copy of fib Bulletin 48 is intended for use and/or distribution only within National Member Groups of fib.

Form traveller or **travelling form**: A formwork which can move by itself without being disassembled.

Letterbox or **window**: Opening in a form to help the pouring of concrete in the middle of a big panel.

Poker vibrators: Vibrator with a cylinder shape to compact the concrete.

Self compacting concrete (or **self-consolidating concrete SCC**): Concrete that is able to flow and consolidate under its own weight, completely fill the formwork even in the presence of dense reinforcement, whilst maintaining homogeneity and without the need for any additional compaction.

Slump test: Test usually done to check the workability of concrete. The higher slump the better workability. Self-compacting concrete has a different way to test fluidity.

Sprayed membrane curing: A liquid applied to the exposed surface of freshly placed concrete to minimise the loss of water by evaporation whilst hardening of the concrete takes place.

Store situation: Situation of a formwork or falsework, after erection and before concreting during the fixing of the reinforcement bars or between two applications.

Jack stroke: The maximum length of movement of a jack.

Concreting chute (or **pipe**): The steel or plastic tube used to prevent segregation of concrete due to the high pouring in a formwork.

Truck mixer: Truck to transport concrete and mix it at the same time.

Truck mixer chute: A device to help the pouring of concrete from the mixer.

Copyright fib, all rights reserved. This PDF copy of fib Bulletin 48 is intended for use and/or distribution only within National Member Groups of fib.

3 General requirements

3.1 General introductions

The integrated system of formwork and falsework shall ensure that specific requirements are met, as far as it may be influenced by formwork and falsework.

The integrated system of formwork, falsework and scaffolding shall ensure its stability. The complex interaction between its elements must be assured by appropriate choice of materials and sections.

Each element or part of the equipment must satisfy specific requirements depending on its function. For instance: In the case of in situ cantilevered bridge construction, the formwork includes panels, joists, stringers, etc. to hold the parts together while assuring the finish quality. Falsework requirements must satisfy the local and general stability of the system, and all its elements; hanging bars, bolts and connections to the permanent structure must be designed for this purpose.

General requirements may be classified according to one or more of the following aspects:

- **Safety**: There are two different aspects to distinguish about safety: structural safety and safety for workers:
  - Structural safety: Temporary structures tend to fail more frequently than permanent structures, therefore, due to its importance, its requirements should be studied carefully. Structural safety must be guaranteed assuring stability in all phases during assembling, erecting, storing, concreting, striking. Besides, some specific activities must be checked considering any case that could modify the condition of the structure, such as prestressing operations.
  - Safety for workers: The first condition in order to guarantee enough safety for workers in construction is structural safety. Besides, it is necessary to implement other safety measures such as:
    - Active safety measures to avoid accidents.
    - Passive safety measures to reduce any potential adverse consequences.
    - Sometimes falsework must enable easy and secure access for workers. In such cases it is necessary that the access comply with safety regulations.
- **Durability**: For the permanent structure, this involves avoidance of cracks in concrete, and ensuring sufficient compaction of concrete. Excessive deformation either in formwork or falsework could result in cracking of concrete when the concreting process is done in several stages.
- **Finish quality**: This involves both limiting deformation of elements and taking care of the quality aspect of the finished surface. The quality of the concrete surface should be specified in the Owner's requirements document.

Copyright fib, all rights reserved. This PDF copy of fib Bulletin 48 is intended for use and/or distribution only within National Member Groups of fib.

3.2 Formwork

3.2.1 Quality of formwork sheeting

The type and quality of the sheeting directly in contact with the placed concrete have a major influence on the desired finished surface, and other physical properties of the concrete. Therefore, special care is needed in the design and construction of its formwork.

Formwork sheeting can be:

- Smooth, glossy, rough, or architectural.
- Waterproof or permeable in regard to the water that might enter the surface.

The usual materials are:

- Timber board, formerly used with visible joints, today sometimes used for special architectural requirements.
- Plywood: with different quality of finishing, for example varnished or painted with resin.
- Steel sheet, for multiple re-uses.
- Polyurethane sheath.

To produce an architectural aspect, suppliers offer a large choice of polyurethane patterns, to be pasted on plywood or steel sheet. The number of uses varies from 5 to 100 times, depending on the resistance of the material (an economical choice must be made).

The quality of the final surface of concrete and the geometrical quality of the final structure depend on the formwork. Local deflections of the sheeting can affect the finished quality and increase the deflections in joists and beams, having geometrical consequences in the global structural behaviour, for instance, increasing self weight.

The requirements must be clear. Working Commission W29 “Concrete Surface Finishings” of CIB (Comité International du Béton) prepared a report about the tolerances on blemishes of concrete, and an evaluation of concrete surfaces using an image analysis process. The study concerns the assessment of non-coated concrete surfaces in civil engineering structures. Concrete surfaces can be qualified with respect to uniformity of tint and distribution of surface bubbles. Not only can the results be compared with current standards, but the method also gives access to additional, accurate information such as the distribution of defects and the size of surface bubbles.

That Commission suggested a table classifying the concrete depending on blemishes of concrete (see Fig. 3-1 and Fig. 3-2). There are four different points to study depending on the type of blemishes.

1. All the possible blemishes of shape such as local and global flatness, inequalities, and defects at the joints.

2. Local defects and surface spots.

3. Localized voids considered as a local defect, and a uniform distribution of the surface bubbles along the entire surface.

Copyright fib, all rights reserved. This PDF copy of fib Bulletin 48 is intended for use and/or distribution only within National Member Groups of fib.

4. Variations in the colour: Depending on the absorption rate of humidity, the colour of concrete cover could vary, showing the differences between compaction rates of concrete areas or between layers of concrete. The Commission also suggested a scale depending on the colour surface of concrete.

Grey scale (CIB-W 29)	Grey scale Kodak
1	0,00
2	0,10
3	0,30
4	0,40
5	0,50
6	0,70
7	1,00

Fig. 3-1. Table to classify concrete surface, reported by the Commission W 29 of CIB. Courtesy of CIB.

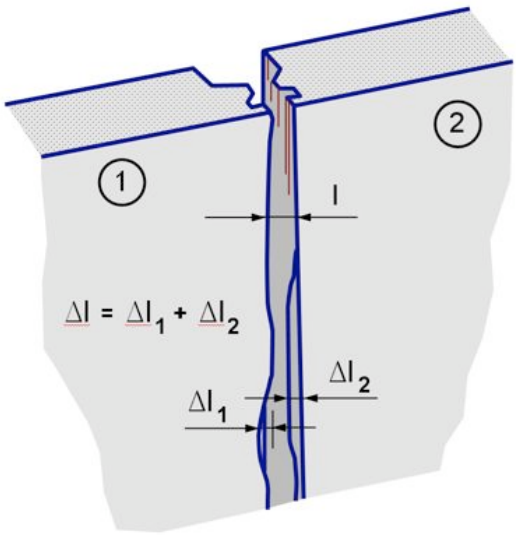

Fig. 3-2. Example of blemishes of the concrete surface reported by the Commission W 29 of CIB. Courtesy of CIB.

Copyright fib, all rights reserved. This PDF copy of fib Bulletin 48 is intended for use and/or distribution only within National Member Groups of fib.

3.2.2 Rigidity (stiffness formwork)

Usually the formwork sheeting of the structural unit requires external support to provide enough stiffness.

Generally, formwork is supported by a frame system including stiffeners, stringers, braces, bolts, etc., which provide the necessary stiffness to support the weight of the poured concrete and to balance the pressure of the concrete on the surface of the form with an acceptable deflection.

In most countries, codes require that the deflection of the finished surfaces should be limited.

The distance between stiffeners must be established to meet the local deflection limits of the formwork. Deformations of stiffeners must be added.

3.2.3 Watertightness

All the joints between sheath or formwork elements should be watertight, in order to avoid honeycombs.

This could be obtained by:

- Overlapping of steel sheets.
- Setting of a polymer joint.
- Welding of steel plates.

This aspect of formwork design is especially critical when using a plasticized concrete and especially when a highly workable concrete is required.

3.2.4 Stability

The formwork is often stabilized by special fittings for example push / pulls props between the vertical form and the support surface or through-ties connecting form panels together. It is necessary that the site engineers should study the different phases of construction to verify the stability of the formworks, during the casting phases and storing. Storing is the stage between the erection of formwork and the concreting, and it usually lasts quite a long time. During that phase, the formwork must resist weather conditions. Most of the time, the form is stored vertically between two applications. To prevent from any falling of the form due to wind action, the form shall be stored face to face or stabilized by means of concrete blocks or fixed to a support by ties.

Weight and pressure of concrete are the most important formwork loads. Usually the weight is well known but the pressure depends on many variables (see appendix A). Pressure could increase when using high-workability or self-compacting concrete.

Some parts of a formwork could float as a result of concrete pressure, for example, when void formers are used; tie-down system should be installed to prevent this occurring.

3.2.5 Additional equipment (furnishings)

Besides joists, beams, gangways and ladders, formwork needs some other small items. These items have the function of giving stability or fitting elements.

Copyright fib, all rights reserved. This PDF copy of fib Bulletin 48 is intended for use and/or distribution only within National Member Groups of fib.

When such items contribute to the strength or stability of the formwork, they should be checked according to the local codes in order to ensure that all the structural safety requirements are met.

Most of them can also be found on falsework equipments.

3.2.5.1 Formwork ties

The layout of the formwork ties must be specified on the formwork drawings before the beginning of works.

The checking of the forces in the ties due to concrete pressure must take into account the plasticity of the concrete and the density of reinforcement.

In order to be able to build concrete members, formworks normally work in groups of two elements (for instance, the two faces of a wall). The link between the formwork parts is achieved by tie-rods going through the space to be filled with concrete and fixed at either end by fasteners. A suitable length of plastic pipe, around the tie rods, permits its removal after concreting. The fixing of the pieces of formwork can be obtained by external fasteners (or nuts) at the end of the panels (see Fig. 3-3).

For walls and columns, tie rods must be designed to provide enough strength to resist the lateral pressure developed by the wet concrete and to ensure that all the specified deflections are not exceeded.

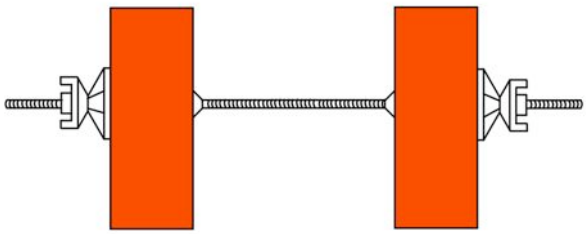

Fig. 3-3. Example of tie rod.

3.2.5.2 Stabilizers

Factory made formwork is often stabilized by telescopic props, which are fixed to a concreted block. With this element, it is possible to stabilize the formwork in its working position as well as in position for storing avoiding problems due to wind effect.

3.2.5.3 Access to the different levels of formwork: gangways and ladders

It is necessary to provide safe access to formwork, so the need for ladders and gangways is required. Usually the need is to provide the access while the formwork is being installed. Ladders and gangways must therefore be set up and properly secured as soon as possible; this should be done before any other safety measure is implemented (see Fig. 3-4).

All the formwork shall be totally protected with perimeter containment screening, guardrail system, and a toe board where there is danger of people or materials falling through the open sided walking or working surfaces.

Copyright fib, all rights reserved. This PDF copy of fib Bulletin 48 is intended for use and/or distribution only within National Member Groups of fib.

Hatchways trapdoors and chute floor openings are installed in some gangways to provide access from a lower ladder. They shall be guarded by hinged covers to fall down automatically after use, in order to avoid dangerous holes in the gangway.

Stairs should be preferred to ladders wherever possible. In the case of ladders, the maximum length is usually limited by local safety regulations.

Fig. 3-4. Working before permanent access installation. Courtesy of Ferrovial-Agroman.

3.2.5.4 Stop-end, day joints (or cold joints)

When concreting must be done in several stages it is necessary to leave joints allowing reinforcement trough. These joints are designed to satisfy two opposite needs:

- Allow the place of reinforcement.
- Prevent laitance leaks.

The usual types are:

- Wood pieces and sheets cut for one use.
- Steel elements mixed with wooden parts.
- Special air inflated elements to close the space between re-bars.
- When the concrete height is not excessive, some manufactured steel products are available, such as “expanded metal Hi-Rib”.

3.2.5.5 Box out

Sometimes it is necessary to provide a box out within the formwork in order to create an opening, window or pocket (see Fig. 3-5). This is also useful if it is necessary to prepare a joint with precast elements, or in situations where second phase setting will occur. In those cases it is possible to use:

- Proprietary systems.
- A timber former.

Copyright fib, all rights reserved. This PDF copy of fib Bulletin 48 is intended for use and/or distribution only within National Member Groups of fib.

- Polystyrene foam piece.
- PVC element.

Attention should be paid to secure these boxes against uplift by the concrete pressure.

Fig. 3-5. A proprietary box-out system. Courtesy of PERI.

3.2.5.6 Mechanical and hydraulic elements

Depending on the number of uses, formwork could be equipped with a number of mechanical and hydraulic elements, such as push/pull props, jacks, etc. Industrial formwork is normally for sale with that type of equipment. Example: travelling formwork, apartment formwork, climbing formwork.

When new formwork is designed for a large number of re-uses, the additional cost of equipment may be balanced by the reduction in manpower costs.

3.3 Falsework and centring

3.3.1 General requirements

3.3.1.1 Structural safety

The main role of a falsework system is to provide structural safety (see 3.2). General requirements are:

- The suitable structural safety level shall be reached following codes for steel, aluminium, timber structures in design, control, assembly, transport, etc. Some specific details not covered by codes, can be validated by testing (see 4.2.2).

- For hydraulic and electric equipment, specific industrial standards must be observed.

- Interaction between falsework and permanent structure must be taken into account, while studying the construction process.

Copyright fib, all rights reserved. This PDF copy of fib Bulletin 48 is intended for use and/or distribution only within National Member Groups of fib.

- Analyses and calculations for temporary foundations must be carried out in a similar manner as would be performed for a permanent structure taking into account the temporary nature of the structure.

In case of falsework structures, the most important loads are concrete weight and pressure. The designer must consider the increase in load due to the increase in volume because of formwork deformation, variation in filling height, etc.

In case of permanent structures, they only receive their full design load in rare cases (e.g. design traffic load on bridges is rarely reached). For this reason the real safety margin before structural failure is lower in falsework than in permanent structures. As a matter of fact, the probability of failure of temporary structures is higher than that of permanent structures.

3.3.1.2 Health and safety

Some special falsework systems have their own access facilities. Sometimes it is necessary to guarantee access for other kind of activities such as prestressing, launching, lifting, etc. In any case, for general requirements see 3.2.5.

General safety plan (health and safety plan) must be observed in site work for any access designed.

3.3.1.3 Deformations and falsework rigidity

Excessive deformation in a falsework could have the following consequences:

- Instability in slender elements.
- Damage in concrete (cracks) when concreting in several stages.
- Geometrical deviations (out of tolerance) in the permanent concrete element.

Deformations of falsework can be balanced with enough pre-camber. Deformations could be underestimated in case of joints with non-prestressed bolts, due to gap tolerances.

Rigidity has important consequences in different aspects of the behaviour of falsework for example:

- Distribution of vertical loads between different props of a tower.
- Distribution of reactions in a continuous beam.
- Interaction between permanent-concrete-structure and falsework.

3.3.2 Specific requirements

3.3.2.1 Quality of materials

Usually falsework will be re-used several times. A review and check (at arrival on site) must be done in order to reject members of formwork material that do not comply with tolerances (deformations, damages, corrosion, etc.).

For some specific members, such as suspension bars, the number of uses shall be limited and the working stresses progressively reduced in direct proportion to the number of uses.

Copyright fib, all rights reserved. This PDF copy of fib Bulletin 48 is intended for use and/or distribution only within National Member Groups of fib.

Special attention must be paid to corrosion and local damage in prestressed bars and deformations in mechanical jacks.

3.3.2.2 Stability

Although usually the main load is vertical, falsework must have sufficient resistance against horizontal forces (see design in 4.2). Therefore, it is necessary to provide sufficient bracing capacity to resist horizontal force component with fixed joints (adequate joint fixity) following the assumptions established in the design process (second order calculation).

Partially erected falsework and storing situations must be checked particularly for appropriate wind loads. Between falsework erection and concreting, reinforcement installation is usually in progress. During this period, appropriate wind load must be taken into account.

For elements that are essential to the stability of falsework (i.e. when its failure would result in a complete collapse), special safety measures must be implemented, such as double mechanism, redundancy, increased safety factor, etc.

Construction process (stages of concreting) must be reviewed in regard to loads on the falsework.

Fig. 3-6. Rotary clamp normally used to fix bracing. Courtesy of Ferrovial-Agroman.

3.3.2.3 Additional equipment (furnishing)

In some falseworks small items of equipment are used, for example mechanical and hydraulic jacks, stays, clamps, etc. In these cases specific standards and “operating conditions” shall be followed. For example:

- Maximum stroke for mechanical jacks in relation to axial and transverse forces (see Fig. 3-7).
- Torque for bolts to tighten clamps.
- Forces to tune stays.

These conditions must be reflected in the design and must appear clearly in drawings. In some cases an operation manual should be provided if necessary.

Copyright fib, all rights reserved. This PDF copy of fib Bulletin 48 is intended for use and/or distribution only within National Member Groups of fib.

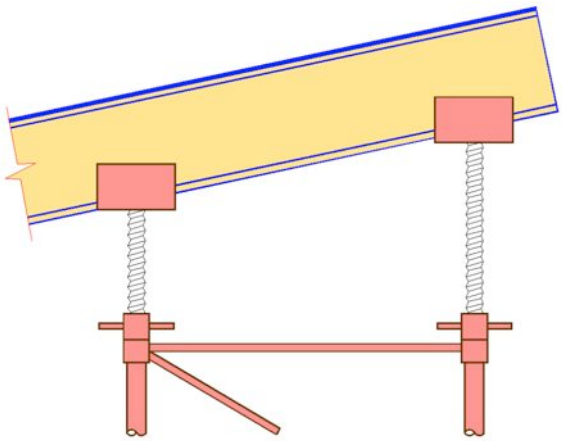

Fig. 3-7. Maximum stroke must be checked taking the slope into consideration.

3.4 Scaffoldings

3.4.1 Quality of materials

The usual patented scaffolding systems are “ready to use” and are sold with a setting-up procedure. Special attention shall be paid checking all the elements before their use, because multiple assemblies and disassemblies could lead to deterioration and consequent risk to the workers.

Thorough visual checking shall be performed and every defective member eliminated.

When using primary load carrying elements such as timber or bamboo (very common in Southeast Asia), a visual check by an appropriately experienced competent person must also be performed to eliminate every weak element.

3.4.2 Rigidity

The scaffolding design shall include bracing or restraining systems to avoid movements due to external horizontal forces or vibrations.

3.4.3 Stability

The same bracing should provide the stability to the scaffolding even under casual impact.

The foundations should be designed taking into account the quality of the ground by reference to information obtained from a geotechnical study, and using adequate distribution plates to limit settlement.

Copyright fib, all rights reserved. This PDF copy of fib Bulletin 48 is intended for use and/or distribution only within National Member Groups of fib.

4 Design considerations

4.1 Management of the design

The design of formwork and falsework must be checked and approved before construction of the element concerned. The design should be in accordance with the general rules given in national codes for the materials/structures applied. The level of verification and calculation procedure utilized must be similar to the one required for permanent steel, aluminium and timber structures. In addition, some relevant specifications shall be taken into account:

- Coordination from design, to assembly and concreting is required to assure the soundness of the equipment. In some cases the design of the permanent work should specify the concreting stages.
- Some special details such as joint braces, mechanical jacks, etc., can be used depending on their conditions, and safety factors must be coherent with security rules within national codes.
- Any special requirement of the permanent structure design affecting the falsework (stiffness, maximum deflections, drifts, local actions, etc.), must be shown in permanent structure drawings.
- The scope of each design can be different in relation to falsework classification:
    - Class A – Falsework made with pre-designed materials. Designing by test is possible (see below).
    - Class B – Falsework designed with steel rolled profiles. The design for such structures should be similar to that used for permanent structures.
    - Class C – Specially developed or very large falsework systems and sometimes with capacity of movement by itself (self launching machines, or movable shuttering systems). In those cases design complexity is higher. For each use, a special study should be undertaken to adapt the general design to the structure currently under consideration. The Operation Manual must be available on site. Any change of the detailed operations must be taken into account and any appropriate technical authorization provided as required.
    - Class 0 – Minor elements of falsework or formwork generally nor design but craftsmanship only.
- The design of the temporary structure must be checked by an appropriate experienced, competent person, not directly involved in the design to be checked.

4.2 Design criteria

4.2.1 Structural design project

The Analysis Model must reflect structural behaviour adequately. Therefore, design must clarify the structural scheme, and identify the path followed by the loads from the deposited concrete to the support on the ground or another storey.

Copyright fib, all rights reserved. This PDF copy of fib Bulletin 48 is intended for use and/or distribution only within National Member Groups of fib.

Design must be specific for each use; however it is possible to perform simplified calculations taking advantage of technical documentation from tests in pre-designed material cases.

4.2.2 Designing by tests

It is possible to verify the design load for falsework or one of its elements through tests. Tests must take into account maximum tolerances (angle deviations, eccentricities etc.) in the worst conditions. Results must be given in a report which involves "Conditions of utilisation" and allowable loads. Results must take into account characteristic values, design loads, SLS, ULS and in general must follow safety rules according to national codes.

In the case of special falsework, testing may be used to validate both design and fabrication.

4.2.3 Loads and combinations

Loads and safety factors shall be taken from design codes. Special attention should be paid to horizontal loadings.

Storing state (while falsework is waiting to receive the concrete) can be more critical with wind loads.

Partial assembly state must be checked, with the suitable wind load condition.

4.2.4 Eccentricity of loads

Suitable load eccentricities must be taken into account for calculations. This is especially important in case of slender structural elements. Deflections caused by several uses must be taken into account.

4.2.5 Connections and details

Connections and details are essential for the soundness of the falsework. Therefore, the design must clarify the type of restraints and details considered in the calculations.

It is especially necessary to clarify assumptions in respect to joint restraint conditions in order to establish anticipated translation of frames.

4.2.6 Support settlement

A careful analysis of the possible support settlements shall be done, taking into account the actual site conditions. The settlement of the structure or part of structure during the placing of concrete shall be studied, and any modification of forces distribution shall be taken into account.

Settlements can be produced by movements in the foundations, elastic deformations, and/or gaps in bolted joints. Any settlement can produce unusual and undesired loads distribution, and may have consequences on geometrical control.

For instance, the theoretical support elevation of the main girder of a launching truss is often different from the actual one at the site. Differences up to 5 or 7 centimeters are usual

Copyright fib, all rights reserved. This PDF copy of fib Bulletin 48 is intended for use and/or distribution only within National Member Groups of fib.

because the top slab of a box girder is not perfect. The equipment should be able to accommodate large variations around the design average value.

4.2.7 Foundations

A geotechnical investigation to check the falsework foundation shall be available before design/construction of the foundation commences:

- The ground conditions at the time of concreting must be taken into account.
- The geotechnical report from the permanent structure can be used with relevant adaptations.
- In some cases a geotechnical engineer must check the ground on the field before the falsework design.
- Settlements shall be limited to ensure both structural safety and tolerances in permanent work geometry.

4.2.8 Ultimate stability and redundancy

The following limit states should be considered in designing falsework and formwork: Ultimate Limit State (ULS) and Serviceability Limit State (SLS).

ULS stability must be checked at the storing stage and in different phases of the assembly. Redundancy could be necessary for critical members (which failure could produce structural collapse).

Usually these types of structures do not experience fatigue, but can be damaged under repeated uses.

4.2.9 Re-use of elements

A material reduction factor should be taken into account in case of re-use of materials. The factor should be selected taking into account the condition of materials at the time of reception.

4.2.10 Loads due to striking: interaction between structure and formwork

During striking of forms the weight of concrete is transferred from the falsework to the permanent structure. The stages of this process must be checked to ensure that the stresses are permissible both for the formwork and for the permanent structure. Special attention should be given to stiffness and deflections aspects.

In case of reverse bending moments, special attention should be given to shear capacity of sections (especially when reinforcement is required to develop adequate capacity). Moreover, moment reversal and redistribution of loads may lead to overloading of structural components of the temporary structure.

The striking operation must avoid violent actions that could cause damage to the falsework.

Copyright fib, all rights reserved. This PDF copy of fib Bulletin 48 is intended for use and/or distribution only within National Member Groups of fib.

4.2.11 Deflections

The deflections of towers, trusses or beams can be underestimated in case of gaps in bolted connections.

5 Control aspects

5.1 Design control

The design check for formwork and falsework shall be organized in a similar manner to that adopted for the design check of the permanent structure. The checking process shall be adapted to the local rules or codes.

Since the safety of workers is dependent on the strength or stability of the formwork and falsework, a strict control system must be organized, and special attention paid to design assumptions (bearing conditions, redundancy, stress or strain limitation, and settlements).

Some changes in concreting imply changes in permanent structure design. Temporary works design control must ensure that temporary and permanent designs are both coherent.

5.2 Erection control

It is recommended that a temporary work controller on site be clearly nominated as the person in charge of checking that the equipment has been set according to the approved documents and regulations, and that it has been tested before its use.

Special formwork should be tested before use.

5.3 Foundation control

For heavily loaded falseworks, sufficient soil investigation should be performed to ensure that the design assumptions fully accord with the actual soil characteristics.

Copyright fib, all rights reserved. This PDF copy of fib Bulletin 48 is intended for use and/or distribution only within National Member Groups of fib.

6 Different types of formwork

6.1 Traditional formwork (fabricated in timber)

The formwork support structure as well as facing material is made of wood-based products, plywood, timber stringers and bracings (see Fig. 6-1). Whilst specific practice varies from country to country, conventional formwork is normally used and re-used for a few concrete pours. One advantage of such simple formwork is that it can be made on site by carpenters.

With wooden formwork, the concrete vibration should be done by poker vibrators. External vibration should be avoided, due to the lack of rigidity of the wooden structure mainly coming from the use of nails.

Sometimes, a mixed construction is chosen, with wood product formwork facing on a steel frame, to achieve a wood textured surface finish for the concrete.

The overweight produced by the water adsorbed in case of rain should be considered in the design of some timber members.

Fig. 6-1. Traditional formwork. Courtesy of Bouygues Travaux Publics.

6.2 Proprietary formworks

6.2.1 Formwork panel

A number of proprietary systems are available on the market (see Fig. 6-2). It is important to check that all access and safety components have been installed before its use. One advantage of such systems is that they would normally have been designed for ease of handling, safe assembly and erection. One important concern is that the formwork panels must be stabilized in position for casting operations, and also when it is stored on site.

Copyright fib, all rights reserved. This PDF copy of fib Bulletin 48 is intended for use and/or distribution only within National Member Groups of fib.

Fig. 6-2. Proprietary formworks. Courtesy of Bouygues Travaux Publics.

6.2.2 Climbing form

6.2.2.1 Definition and classification

Formwork for vertical or near vertical structures, in which each lift is supported by the previous lift after reaching sufficient strength, by mean of brackets or anchor bolts.

This type of formwork is often used in the construction of tall bridge piers, buildings, industrial chimneys, and other tall vertical structures, and it allows the re-use of the same formwork over and over for identical or very similar sections further up the structure.

Some systems are moved by means of a crane; others are self-lifting, with their own jacks.

There are two methods to raise the form upwards:

- With the help of one or more cranes (crane-climbing).
- By means of hydraulic jacks fixing themselves to holding points or rails emplaced in the previously cast concrete (self-climbing). In this case, since it does not need any crane for its elevation, it also could be used in the presence of wind.

Copyright fib, all rights reserved. This PDF copy of fib Bulletin 48 is intended for use and/or distribution only within National Member Groups of fib.

Fig. 6-3. Self-climbing form in Millau Bridge. Courtesy of PERI.

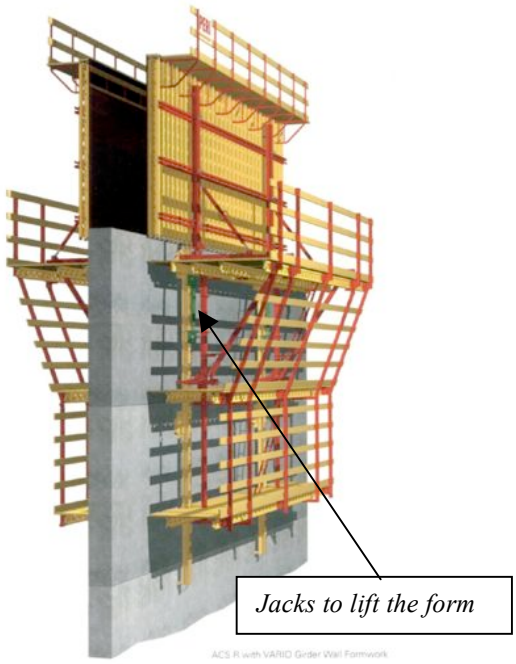

Fig. 6-4. Self-climbing form. Courtesy of PERI.

According to the way the lateral pressure due to concrete placement is resisted, the climbing formwork could be classified as:

- **Climbing formwork with two form panels** (see Fig. 6-4): the formwork pressure is resisted by tie anchorages that tie the formworks of two opposite form panels of the element. In this case, the centring supports its self-weight, construction live loads (materials, equipment, activity by the workers), and external forces such as wind (control load). In case of inclined formworks, they will have, in addition, a horizontal component of the concrete weight.

- **Climbing formwork with one form panel** (see Fig. 6-3): When one of the form panels does not exist, or the distance between opposite form panels is too large, the formwork has to support the pressure from the freshly poured concrete (control load).

All the methods can be cleaned *in situ* without disassembling the formwork.

6.2.2.2 Description

A climbing formwork is formed (depending on its geometry and field conditions) by a set of the following elements:

Form sheeting: In general it will consist of a conventional formwork panel for the construction of walls. A top platform for the concrete placement shall be incorporated and, depending on the height of the panel, another platform at mid height of the panel is provided to allow the access to intermediate positions of anchorages or connection elements between modules.

Copyright fib, all rights reserved. This PDF copy of fib Bulletin 48 is intended for use and/or distribution only within National Member Groups of fib.

Climbing bracket (see Fig. 6-5): In general it consists of two triangular braced structures that support the climbing platform. The shutter fitted to the climbing bracket has three axes of movement, enabling the vertical wall to be constructed at any angle. Along with the bracket, a hanging platform is provided for access to the cast face, and for safe working when carrying out finishing work, repairing tie holes and recovering anchor cones used on previous pours.

Anchorages: They must be designed to hang the climbing bracket without the direct intervention of any worker, avoiding their presence on the climbing platform during its lift phase. In every lift position, the anchorages of the previous two layers of cast concrete are used: the climbing bracket is fixed in the highest anchorage, and the wind ties are fixed in the lowest anchor point.

Assembly elements: Complementary equipment which allows connection of the formwork panel and the climbing bracket. In the newest climbing brackets, the assembly elements must enable the complete lift and all the formwork operations, allowing checking the plumb and alignment, to clean and oil the form panel, and fix the reinforcement well. In case of climbing formwork with one form panel, the connecting elements will have to be sized to allow the transmission of concrete pressure, guaranteeing enough pressure in the contact between lifts to avoid grout losses.

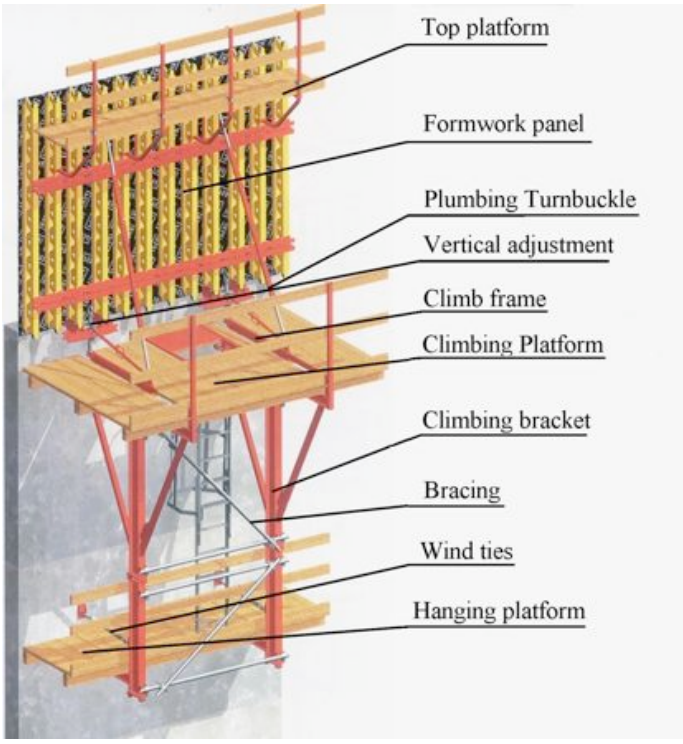

Fig. 6-5. Climbing bracket. Courtesy of PERI.

6.2.2.3 Recommendations for design

Besides all the usual recommendations for any type of formwork, the crane supporting the climbing formworks shall ensure enough capacity to lift up the climbing bracket with a wide safety range. In the project, the lift phases and the position of the stairs shall be planned in order to have at the same level all the platforms when one of the climbing brackets has been lifted up.

Copyright fib, all rights reserved. This PDF copy of fib Bulletin 48 is intended for use and/or distribution only within National Member Groups of fib.

The project will consist of a report (including all the members of the climbing bracket, assembly and functioning specifications, and design load capacity), definition of technical conditions of use, calculations, and drawings.

6.2.2.4 Recommendations for site work

Tests or enough conservative assumptions shall be done in order to characterize the concrete and determine the influence of additives during the design process. Some additives and concrete with lower initial strength can produce important increases in lateral pressures. The field manager shall verify if the concrete has been designed to ensure adequate initial bearing strength and punching resistance to support the pressure of the anchorages by the climbing bracket at the moment of the lift.

6.2.2.5 Labour considerations

All the climbing brackets shall be totally protected with perimeter containment screening, guardrail system, and a toe board of 150 mm high where there is danger of people or materials falling through the open sided walking or working surfaces. Additionally, non-slipping metallic platforms are required in all the formwork.

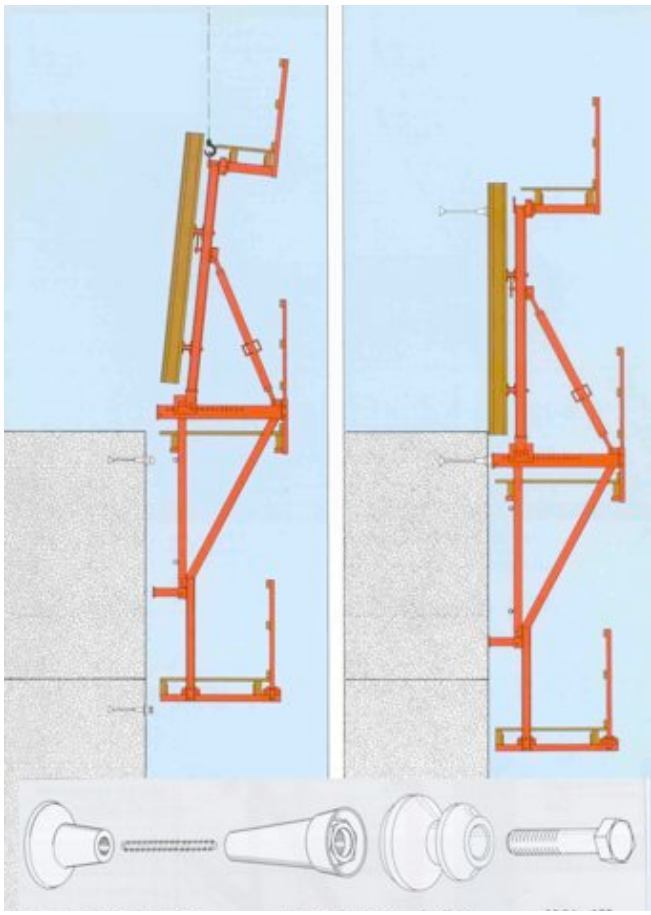

Brake cone (nut), axle, climbing cone, bearing, hook bolt

Fig. 6-6. Assembly system. Courtesy of PERI.

Copyright fib, all rights reserved. This PDF copy of fib Bulletin 48 is intended for use and/or distribution only within National Member Groups of fib.

6.2.2.6 Recommendations for the disassembly

The punching strength of the concrete controls the strength of the concrete since during the lift of the climbing formwork it does not have any bending. The supplier of the anchorage system shall specify the ultimate strength of the anchorage.

The design document must specify the process to do disassembly operations with enough safety measures. Workers must be trained to do any operation properly, especially:

- It is necessary to implement measures to remove anchorages safely.
- When they are dismounting guardrails and gangways alternative safety measures must be used.

6.2.3 Slip form

6.2.3.1 Definition

As the previous one, these formworks are used to build tall vertical elements (piers, building, mast, chimneys, etc.), so it is a self-climbing system. The climb is usually carried out continuously during concrete pour; the power for the climbing operation can be provided in a variety of ways, but is usually achieved by hydraulic jacks or electric motors. The already hardened concrete shaft gives guidance to the form.

Theoretically this method is more suitable to build tall structures. The slip form method works better than other methods with windy weather and in addition the help of a tower crane is not always necessary. Nowadays this method is in competition with self-climbing method. Slip form has the advantage of a high-speed construction but disadvantages of a non-stop work. Another advantage is that there are not horizontal joints. However the finishing is very sensitive to variations of any parameter (velocity, weather, hardening time of concrete, etc.).

6.2.3.2 Description and classification

The forms may be divided into different components: sheathing, wales, yokes, deck and the hydraulic jacks. These forms are subjected to both vertical and lateral loading. The entire weight of all decks and of the finishing scaffolds is carried on the jack rods. From the jack rods, the vertical loads are transmitted from the sheathing and decks to the wales, through the yokes to the jacks, and into the jack rods. The only function of the concrete is to support its own weight and the “drag force” or the friction of the concrete against the forms as they are raised, and to prevent the jack rods from buckling.

Besides, there are two or three different platforms. A top platform could be used for the installation of vertical reinforcement, recovering of jack rods, and eventually placement of concrete. An intermediate platform used for the installation of horizontal reinforcement and anchorages, placement and vibrating of the concrete, and control of all the hydraulic equipment stored on the deck. And an inferior platform, also called hanging scaffolding, is provided for safe working when carrying out finishing work, curing of the concrete without formwork, recovering used forms, and bracing elevators and stairwells. Some of the major constructions, which use this type of slip forms, are tanks, silos, and cores of high-rise buildings (these includes elevator shafts, stairwells, toilet facilities, and mechanical runs).

Copyright fib, all rights reserved. This PDF copy of fib Bulletin 48 is intended for use and/or distribution only within National Member Groups of fib.

There are two different types of slip forms:

Slip forms with a constant geometry of the formwork: This type of formwork consists of a fix form (adapted to the geometry of the structure and fixed to the yokes, where all the jack rods are placed).

Slip forms with a variable geometry of the formwork: This type of formwork is used to suit a particular variable shape. This variation is achieved with a system of fixed and movable panels with controlled relative movements, and tie rods anchored to a fixed structure allowing the movement of the yoke to its axis.

Fig. 6-7. Slip formwork for Machang Bridge. Courtesy of Bouygues Travaux Publics.

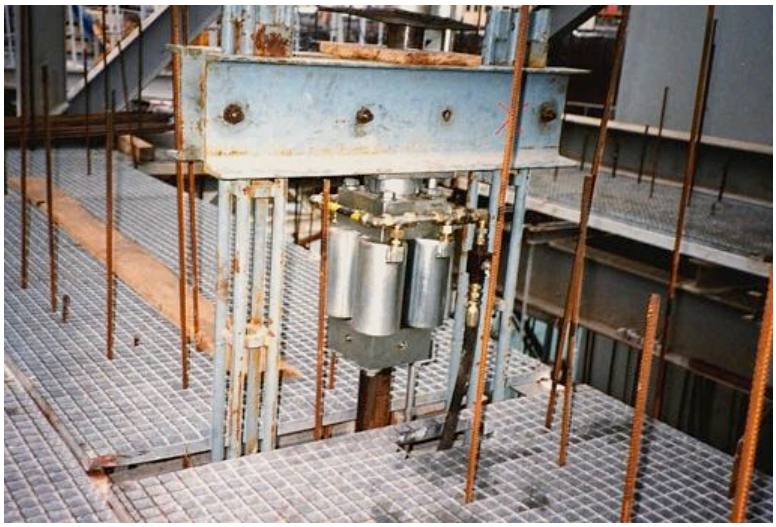

Fig. 6-8. Yoke and hydraulic jacks. Courtesy of Edytesa.

Copyright fib, all rights reserved. This PDF copy of fib Bulletin 48 is intended for use and/or distribution only within National Member Groups of fib.

6.2.3.3 Recommendations for the design

The dead loads and all the live loads of the deck and of the scaffold must be included in the vertical design loads. Reinforcing steel, forming boxes and other materials to be stored on the decks must also be considered. Another important vertical loading on the slip forms is the drag force picked up directly by the sheathing and transmitted to the wales as a uniform load. The deck loads are applied directly to the top wales by joists and beams, and the scaffolding loadings are also applied to the top wales by scaffold brackets. These loads must be carried by the forms to the supporting yokes. In addition to the vertical loads, the forms must carry the hydrostatic lateral pressure of the plastic concrete. The only time that the lateral pressure on the lower wales is large is when the empty forms are first filled. Under normal conditions the concrete in this area is not plastic, and the upper wales take the lateral pressure. The yokes are designed in the shape of an inverted U whose legs are attached to cantilever beams. The cross arm of the yoke must be designed as a beam, supported at the centre by the jack and subjected to moments from both vertical and lateral loads.

The bearing and the raising support are provided by jacks and rods. The hydraulic jacks are cylindrical in shape, with a hole in the centre through which the jack rod passes. They usually have two jaw clutches, which alternately grip and raise.

The design of the reinforcement must ensure that the distribution of bars is quite uniform. Therefore laps must be distributed at several levels (more than climbing formwork method). This uniform distribution enables a continuous reinforcement operation.

Fig. 6-9. Slip formwork in Tanger harbour. Courtesy of Bouygues Travaux Publics.

6.2.3.4 Recommendations for site work

Slip form construction requires supervision of a high calibre and at least one person “on deck” who is sufficiently experienced in this method of construction; the rest of the crew does not require any more know-how than is required for conventional concrete placing.

There are a number of companies specialized in sliding construction around the world that have developed patented systems, which shall be used only by suitably experienced contractors.

Copyright fib, all rights reserved. This PDF copy of fib Bulletin 48 is intended for use and/or distribution only within National Member Groups of fib.

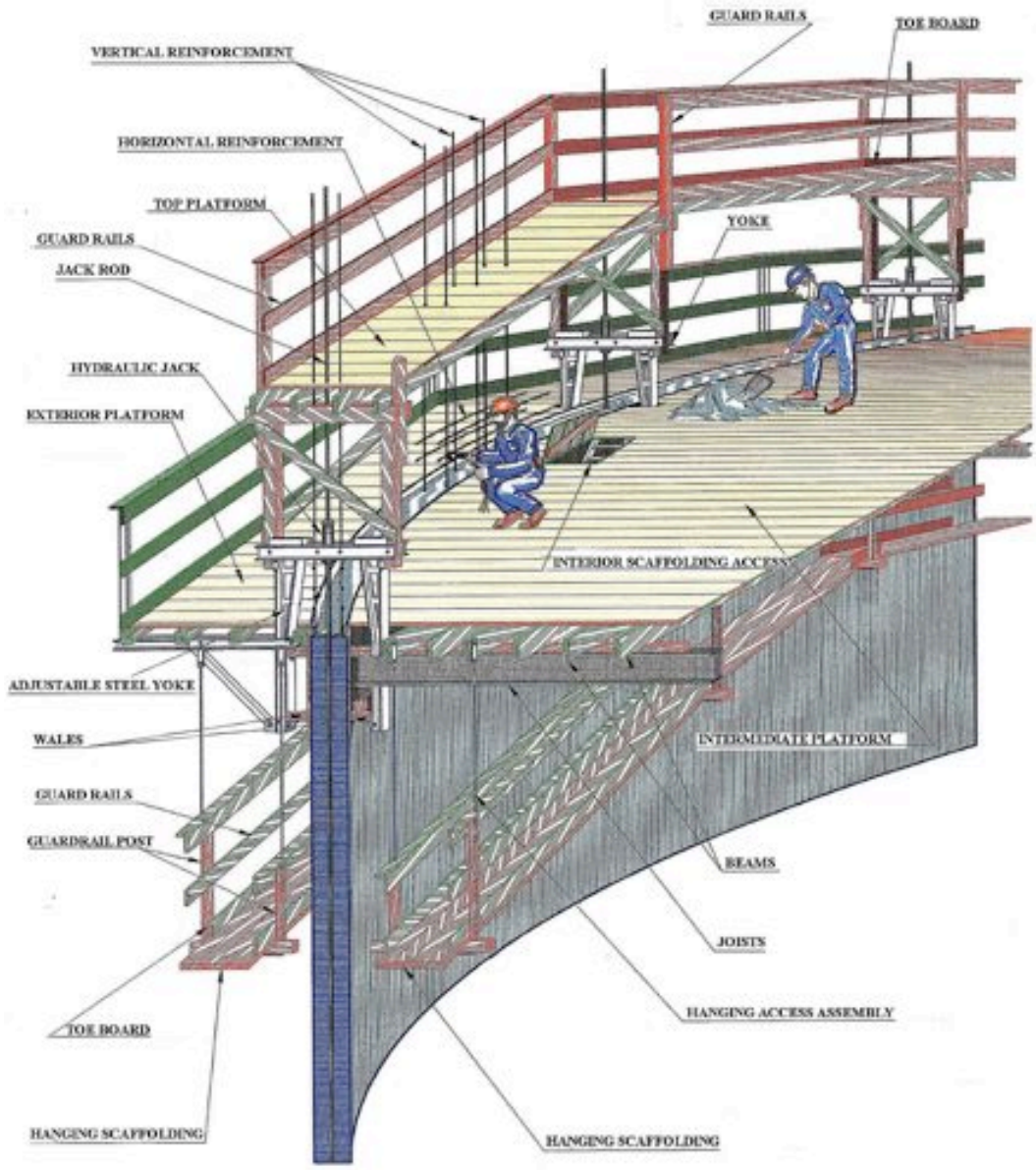

Fig. 6-10. Section through slip form. Courtesy of Edytesa.

Some of the technical challenges that must be solved by the site organization include:

- Continuous supply of concrete (proper formula design is indispensable in order to prepare concrete that meets required uniform and consistent properties), reinforcing bars, and sometimes prestressing sheaths.
- The physical properties of the concrete mix must satisfy certain criteria. It must be uniform and consistent through out the time span of the pour, setting time must be controlled, workability to enable satisfactory placing must be assured, plastic properties of concrete must be checked due to weather changes, etc.
- Reinforcing bars must be delivered, cut and bent, fixed, and concrete placed without stopping the lift.

Copyright fib, all rights reserved. This PDF copy of fib Bulletin 48 is intended for use and/or distribution only within National Member Groups of fib.

- It is necessary to balance the speed of lifting and the hardening time of concrete, in order to avoid dragging the concrete in contact with the form and at the same time to allow sliding the form against the already hard concrete. Actually, the speed of the sliding form operation is not controlled by the capabilities of the jack but rather by the rate of set of the concrete. Theoretically the concrete must approximately achieve its definitive shape once it arrives at half the height of the formwork. If the average speed of a lift is 3-5 m per day, then the cast concrete will appear below the formwork 5-8 hours from its placement. If the jacking operation is too rapid, plastic concrete will fall out from the bottom of the forms. If the jacking rate is too low, the concrete will adhere to the forms and either cause the forms to bind or, what is most probable, the concrete will tear horizontally and lift with the form. The optimum jacking rate is greatly influenced by concrete properties and temperature. Higher rates of slide are required in hot, dry weather and lower rates in cold, wet weathers.

- If some problem appears it is possible to stop the form, but in that case, delicate operations must be done to restart again, and some times stopping the lift before the top level is reached can lead to major difficulties with bad consequences in surface quality concrete.

A well-organized and suitably experienced site operation is required before commencing the lift operation.

Some owners and their consultants are not prepared to accept slip forming techniques because the aspect of the final concrete surface is not smooth due to the friction of the form.

Trowelling of the young concrete from the hanging deck is a normal treatment to obtain nice-looking surfaces.

The system shall be set up to avoid inducing torsion in the structure as a whole. For instance, a hollow rectangular tower cannot be filled constantly in a clockwise direction, as this will tend to make the forms rotate about the centreline of the structure.

To reduce the risk of people getting hit by falling objects, a controlled zone around the structure must be created of which the radius equals one quarter of the height of the works.

6.2.3.5 Recommendations for the disassembly

Some proprietary systems offer the possibility of disassembly of the equipment with the help of little winches, thus avoiding the help of a tower crane. However, sometimes this is hardly an advantage if a crane is necessary anyhow for other tasks. For instance, in case of piers, it is needed for the construction of a bent on the top of the pier.

In any case alternative measures must be implemented during disassembling operation in order to guarantee the safety of workers.

Copyright fib, all rights reserved. This PDF copy of fib Bulletin 48 is intended for use and/or distribution only within National Member Groups of fib.

7 Specialized formwork/falsework/centrings

This chapter covers complicated equipments, so class C design recommendations must be taken into account (see 4.1).

Some of them work both as formwork and falsework.

7.1 Specially manufactured forms

Where a large number of uses are expected steel faced formwork either purpose made or as proprietary panel systems should be considered. In those cases, for specific works, it is possible to design equipment that is easy to dismantle, ready for use with gangways, ladders and handling points.

This specialized formwork is usually used for incremental launching of decks or precast elements such as precast segments or beams.

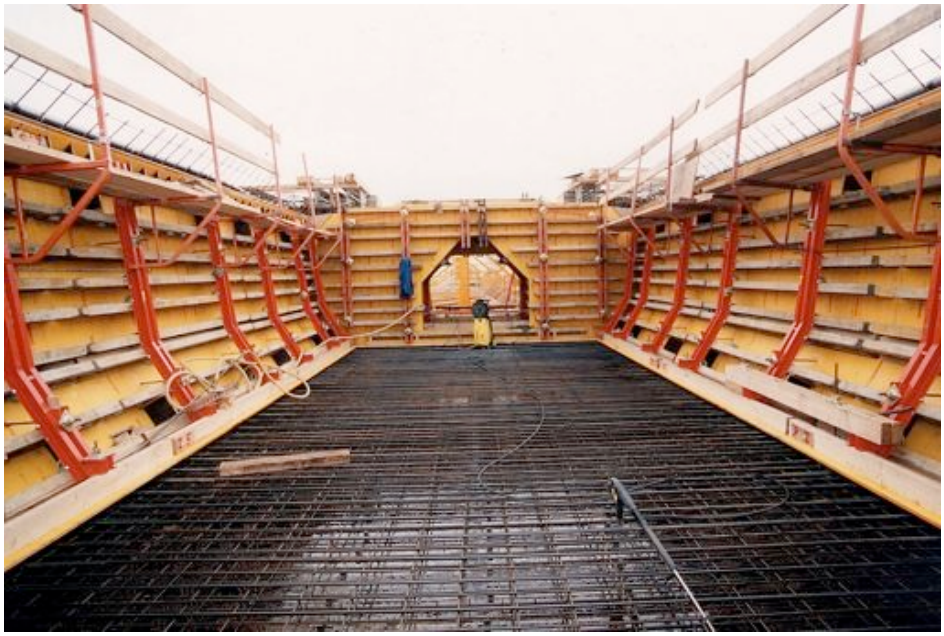

Fig. 7-1. Formwork for incremental launching decks. Courtesy of Setra/CTOA, Gerard Forquet.

7.2 Bridge shoring

7.2.1 Definition

This type of falsework carries the load of the structure directly to the foundation and is normally used for small heights (up to 15-20 meters). For greater heights, or higher loading, heavy-duty towers with spanning girders between them are required.

Copyright fib, all rights reserved. This PDF copy of fib Bulletin 48 is intended for use and/or distribution only within National Member Groups of fib.

The different elements that comprise this type of equipment are:

- **Formwork:** gives form and contains concrete during placing and hardening.
- **Transverse framing**: gives shape to the cross section of the bridge. Transmits the loads to the shoring towers. Sometimes, additional structural elements may be required to distribute the loads from the transverse framing to the shoring in a uniform way.
- **Spanning beams**: when a span is necessary due to an opening, or ground slope.
- **Bearing towers**: built up from vertical props, usually placed in groups of four elements. At the top, there are located screw jacks, adjustable in height. At the bottom, there may also be screw jacks ending in a base plate that bears on the shoring foundation.
- **Bracing**: allows transmitting horizontal loads to the support. Also may reduce the buckling length of the shoring towers.
- **Foundation**: transmits the tower's load to the ground bearing strata. Depending on the magnitude of applied load, the foundation type required may range from timber footings made with several timber pieces (e.g. sleepers) laid together or reinforced concrete footings for higher loads.

Fig. 7-2. High falsework for bridge shoring. Courtesy of Bouygues Travaux Publics.

Copyright fib, all rights reserved. This PDF copy of fib Bulletin 48 is intended for use and/or distribution only within National Member Groups of fib.

Fig. 7-3. Different parts of this type of falseworks.

7.2.2 Recommendations for design

Simple designs help to make an easy evaluation of the global load scheme of the structure used as falsework. In this case is easier to identify the path followed by the load.

The main problems detected in shoring design are:

- Lack of definition.
- Inadequate design of foundation.
- Insufficient or lack of bracing.
- Incorrect load distribution.
- Lack of technical data or testing of the shoring elements.
- Screw jacks with lengths exceeding the safety standards (more usually found with strong (off-vertical) inclinations).

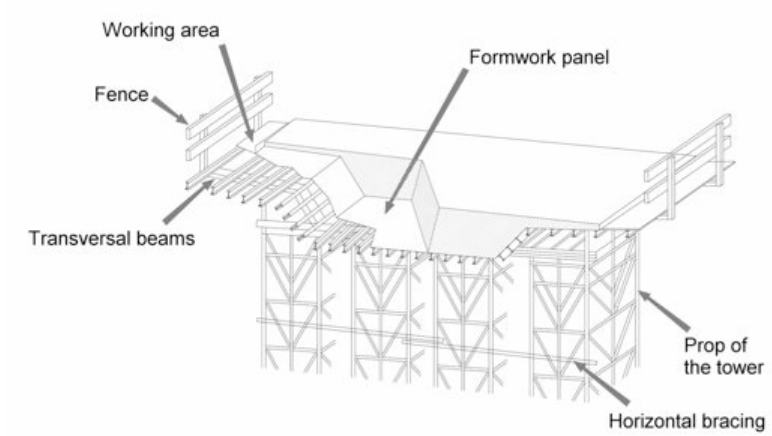

Fig. 7-4. Scheme of a shoring falsework.

Copyright fib, all rights reserved. This PDF copy of fib Bulletin 48 is intended for use and/or distribution only within National Member Groups of fib.

Fig. 7-5. Frames to cross roads and slopes. Courtesy of Ferrovial-Agroman.

7.2.3 Specific recommendations for each shoring element

Formwork: This element has to support the pressure of the concrete (and also prevent the loss of grout). Nowadays, these pressures are increasing due to new concrete additives and must be taken into account in the formwork design.

Transverse framing: This element must be uniformly placed to distribute the load properly onto the shoring.

Spanning beams: These beams have to be provided with the necessary stiffeners in cases of concentrated loads. Transverse stability of these elements must be analyzed as well.

Bearing towers: Sometimes designing by test is necessary. In that case the transverse forces together with geometrical and mechanical imperfections must be taken into account. Necessary bracing, and measures taken to ensure that movement conditions (as designed) at the top level are actually implemented.

Bracing: Three types of bracing may be designed:

- **Tower bracing**: no large gaps should be allowed in the joints of the bracing. If this occurs it can cause an increase in the flexibility of the structure and that may possibly lead to global failure.
- **Vertical cross bracing**: which carries the horizontal loads to the supporting ground, should be fixed to the most heavily loaded footing to prevent unacceptable horizontal movements.
- **Horizontal bracing between shoring towers**: used to limit the buckling length of a complete tower. It should be designed with enough capacity to carry a nominated percentage of the vertical loading in the towers.

It is commonly considered acceptable that bracing must be designed for the 1/40 to 1/100 of the total load that is being braced.

Copyright fib, all rights reserved. This PDF copy of fib Bulletin 48 is intended for use and/or distribution only within National Member Groups of fib.

Fig. 7-6. Bracing. Courtesy of Ferrovial-Agroman.

When stayed cables are used in shoring towers, it is important to check the compatibility between cables and tower deformations (cable deformations may be too high and could exceed the shoring tower deformation allowance).

Foundation: the foundation must be designed taken into account the maximum settlement allowed for the falsework structure. The load must be distributed uniformly to the bearing level. In this way a prop footing must be placed at a permissible distance from the edge of a slope.

In timber foundations a 45º angle can normally be considered adequate for assessment of load transmission.

7.2.4 Recommendations for site work

7.2.4.1 Previous works

The activities listed below must be carried out:

- Levelling of the work site.
- Provide a drainage system to avoid water presence in shoring foundation.
- Perform a topographical survey of the site checking that it matches with assumptions made in relation to project design of the falsework.

Once the materials have been received at the construction site, the quality of the different shoring elements must be checked. Those which do not fulfil the specified technical requirements should be rejected.

7.2.4.2 Foundation recommendations

The foundation is a relevant part of the falsework structure. Many accidents have occurred as a result of inadequately designed and constructed foundations. These two proposals will help to achieve safer foundations:

Copyright fib, all rights reserved. This PDF copy of fib Bulletin 48 is intended for use and/or distribution only within National Member Groups of fib.

- All the footings of a bearing tower should lie horizontally, on similar types of soil to achieve uniform foundation settlements. It is very important to observe that if the shoring foundation is bearing both on bridge footing fillings and natural terrain, then different amounts of settlement would be expected for the two types of soil conditions.

- The foundation of the bearing towers could be placed at different levels. The minimum distance to the edge of the slopes must be within prescribed limits to avoid soil slipping under tower loads.

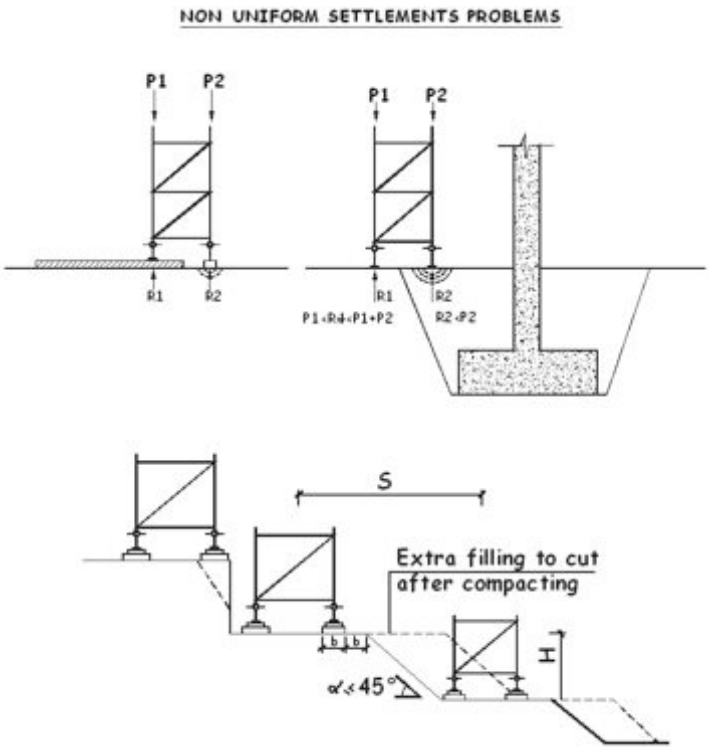

Different settlements in both props of a tower can produce tower overturning.

Left figure shows the case of a different foundation with different stiffness in both props.

Right figure shows the case of a prop bearing on bridge footing fillings and the other prop bearing on natural terrain.

This figure shows the case of props very close to the edge of a slope. This can produce a slipping fracture in the soil.

In this case, previous compaction of the edge is required.

Fig. 7-7. Common problems with foundations.

7.2.4.3 General recommendations

In this chapter, some proposals to avoid failure are given:

- The bearing of inclined elements must guarantee the elimination of horizontal forces. Wedges between these two elements can help to transfer only vertical loading (see Fig. 7-8).

- Load transmitted to the shoring towers must be applied centrally, so no additional eccentricity is added. Any necessary element shall be placed to achieve this recommendation.

- When shoring is very high, a particular attention should be made to take into consideration the shortening of the equipment under vertical loads, and temperature.

- Diagonal bracing connections must be located as close as possible to the structural joints.

Copyright fib, all rights reserved. This PDF copy of fib Bulletin 48 is intended for use and/or distribution only within National Member Groups of fib.

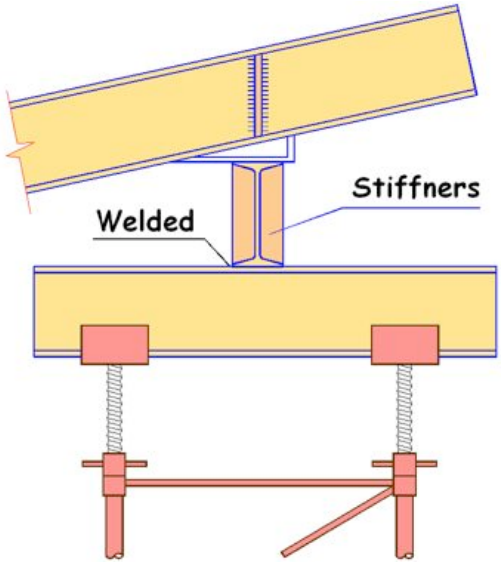

Fig. 7-8. Detail with slope.

- Before casting concrete into the formwork, all the bearing elements that constitute the falsework must be checked, including general bracing and foundation. Bolts and connections shall be tightened as per the requirements of the designer's specification.

- It is important to properly place the concrete into the formwork: sudden impacts or highly localized and concentrated loads due to large deposits of fresh concrete can cause unpredictable situations for which the system has not been designed and could in certain circumstances lead to structural failure. Proper assumptions must be made in the design.

7.2.5 Recommendations for formwork striking

Striking of falsework will normally be carried out once concrete has gained sufficient strength to support the stresses arising due to the self weight of the structure together with any imposed temporary loads including loads arising from the work involved in striking operations.

Normally the concrete strength at which it is permissible to strike formwork should be specified by the designer of the structure and not by the designer of the formwork.

Striking of forms should be accomplished in a progressive way, trying to avoid impacts with the shoring structure. It is recommended to use auxiliary elements to achieve a uniform and gradual decrease avoiding important differences in vertical displacements.

The design of the permanent structure and of the formwork movable parts should take into account the striking operation.

The whole striking process must be completed according to a striking program. It must include all the stages and loads implied in the process, in order to ensure global security of the structure during the construction.

Copyright fib, all rights reserved. This PDF copy of fib Bulletin 48 is intended for use and/or distribution only within National Member Groups of fib.

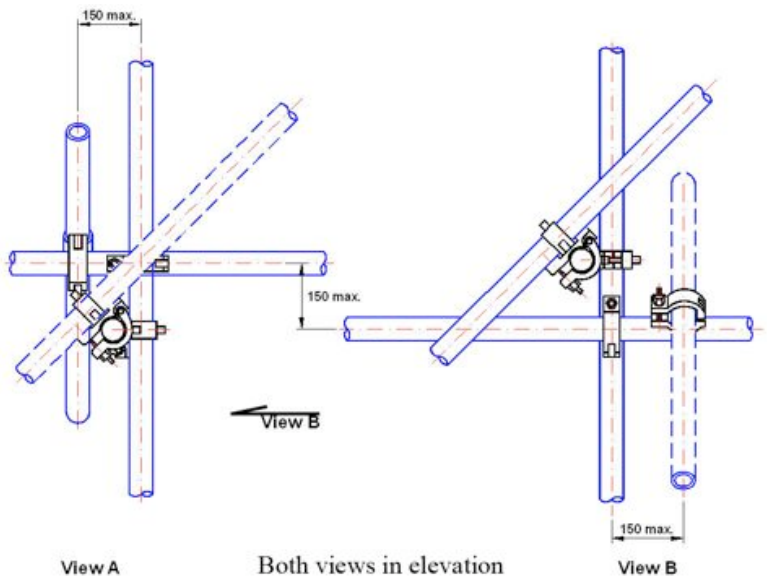

Fig. 7-9. Maximum allowed eccentricities for tower bracing (based on pr EN 12812).

In prestressed concrete structures, there is usually a first stressing stage that creates an up-lift of the structure. This up-lift performs the first stage of formwork striking. The permissible stress in the concrete at this stage is determined by the compressive strength of the concrete at that age.

7.3 Travelling formwork – General aspects

7.3.1 Definition

A form traveller or a travelling formwork is a movable formwork carried by a mobile structure, which can be re-used after striking without having to be disassembled. This type of formwork acts both as falsework and formwork, since the bearing system is part of the equipment. It is also known as movable shuttering system (MSS).

There are several kinds of travellers for different uses, such as:

- Formwork for slabs in composite or pre-cast decks (see § 7.4).
- Tunnel vault formwork (see § 7.5).
- Span by span bridge construction (see §7.6).
- Cantilever bridge construction (see §7.7).
- Some types of apartment formwork (see §7.8).

The requirements and recommendations may vary for each type of travelling formwork listed above. This chapter specifies general aspects that may be considered common for all of them. Specific recommendations have been identified within section § 7.4 to § 7.8.

The most important characteristic of this type of equipment is the movement capacity. This is not a common consideration as most structures are normally considered as static situations. It is therefore essential that special care is taken in design, site work, installation and dismantling.

Copyright fib, all rights reserved. This PDF copy of fib Bulletin 48 is intended for use and/or distribution only within National Member Groups of fib.

7.3.2 Recommendations for design

A design document must be developed by professionals with the specific expertise in this type of equipment. Usually such special equipment may be re-used for several applications. A new design document must be developed for each re-use.

There is a very close relationship between the design of the main structure and the design of this type of formwork.

At least three different stages must be checked:

- Work situation: This situation refers from the pouring to the strike. The main action comes from the concrete. But others actions must be taken into account as prestress, wind and live loads from temporary works.

- Movement situation: During the launching process, structural scheme is changing, and its load distribution. It is necessary to check the worst situation in all the phases of movement. This stage concentrates a high level of risks.

- Assembly dismantling and transport situations.

It should also be remembered that such equipment normally contains some special industrial installations. Therefore in addition to structural requirements, other considerations must be fulfilled, for example standards related to electrical, mechanical and hydraulic equipment.

It is not common that national standards cover the “basis of design” of this type of equipment. Concrete weight is the most important load, and it is considered as a variable load from the point of view of load factors.

Local accumulation of concrete in heaps during pouring can increase local action on panels, joists and beams. This effect is not important for the truss calculation but could be critical in formwork and local elements.

The design document must take account of the following:

- Deformation must be assessed during the design stage and checked in the work site. It is common to obtain deflections higher than calculated due to gaps in joints.

- During movement, the main actions are the wind and those due to movement operations. In the case of a structure covered with panels or canvas covers, it is necessary to be careful about the sail effect.

- In general mobile equipment presents additional risks and difficulties. As a matter of fact, some accidents have taken place dealing with this kind of equipment, during launching.

- The different phases of the concreting must be taken into account.

- The safety conditions required for the handling and maintenance of the equipment, guaranteeing a safe access for workers.

Copyright fib, all rights reserved. This PDF copy of fib Bulletin 48 is intended for use and/or distribution only within National Member Groups of fib.

- Redundancy of main elements (whose failure could produce a structural collapse) with additional mechanisms.
- Systems to reduce the consequences of possible human mistakes during operation.
- Transportation and assembly in the construction site.

The design document must contain the following information:

- Characteristics of the structure to support the loads imposed by the formwork.
- Stages and speed of concreting.
- Type of concrete and concreting equipment (in order to fix the pressure action).
- Corridors to allow adequate vertical and horizontal clearance.
- Existing work site elements that may interfere with the assembly or operation.

The designer of the equipment must provide:

- Assembly instructions with requirements and specifications, including drawings.
- Operation manual describing each phase of the work.
- Transportation instructions.
- Reception requirements for materials and elements.
- Load test if necessary.
- Deformations and pre-camber.
- Loads applied to the existing structures and transmitted to the ground where towers are used.

The operation manual should include:

- Study of all situations during movement.
- Clear description of the most important manoeuvres.
- Dangerous or forbidden operations and possible risks.
- List of aspects to be checked after assembly and before each concrete placing operation.

7.3.3 Recommendations for site work

The site manager must know and understand the “operation manual”. He or she must check the assumptions made during design (loads, concreting stages, type of concrete). The design assumptions must be checked, especially in the bearing system.

Copyright fib, all rights reserved. This PDF copy of fib Bulletin 48 is intended for use and/or distribution only within National Member Groups of fib.

An inspection of the equipment is required before every use, in order to be sure that materials are in good condition. Reception requirements (as specified in the design document) for materials and elements must be fulfilled.

The provider of the falsework must check the assembly in different positions. The designer must be consulted before any change in the operation.

Before each concreting operation, a check of main elements must be performed, including a visual inspection of the traveller by an appropriately experienced, competent person. A checklist is recommended for this task.

A plan to check the geometric control of the formwork must be prepared. Concreting works must be performed following the assumptions made during design. Concreting operations must be planned in order to avoid unstable situations.

Fig. 7-10. Sometime it is necessary to allow enough space to pass materials. Courtesy of PERI.

7.3.4 Recommendations for striking and dismantling

Striking and dismantling must be performed following the process established during design. A qualified engineer must be consulted before any change can be done.

7.4 Travelling formwork for deck slabs

7.4.1 Definition

This type of traveller is sometimes used for concreting slabs over pre-cast beams or composite decks. Another possible usage is the concreting of second stage slab for transverse cantilevers. In those cases the use of permanent props or ribs is common.

Copyright fib, all rights reserved. This PDF copy of fib Bulletin 48 is intended for use and/or distribution only within National Member Groups of fib.

Fig. 7-11. Traveller for a slab on a composite deck. Courtesy of PERI.

7.4.2 Recommendations for design

The sequence of concreting taken into account in the permanent structure design must be respected.

Other requirements to take into account are:

- Sufficient space must be provided to allow passage of trucks or materials through the falsework.
- Space or enough clearance to mount reinforcement bar by bar or accommodate pre-assembled reinforcement.
- Sufficient and safe access to permit activities such as mounting props, prestressing, striking, etc.

Fig. 7-12. These travellers allow simultaneous concrete slab and assembling of permanent props or ribs. Left: Courtesy of Alcor. Right: Courtesy of Mecanotubo.

Copyright fib, all rights reserved. This PDF copy of fib Bulletin 48 is intended for use and/or distribution only within National Member Groups of fib.

7.4.3 Recommendations for site work

Interface surfaces between two-phase concreting operations must be carefully considered. In any case construction joints must be done as specified in design document.

Special care must be paid to prestress hanging bars to avoid brittle failure. Any small damage can produce a critical fracture.

7.4.4 Recommendations for striking and dismantling

It is necessary to avoid violent action during striking, especially against prestressing bars.

7.5 Tunnel vault formwork

7.5.1 Definition

A particular type of travelling formwork is the one used to make tunnel vaults. Two types of equipment may be distinguished:

- bored tunnel traveller, and
- cut and cover tunnel traveller.

This type of formwork is generally made of parallel frames with one or two hinges. These frames may be several meters in length (5 to 15 meters), depending on the section of the tunnel and the time schedule.

The general requirements are given in section 7.3, but a number of specific recommendations for this kind of equipment are listed below, together with some remarks on general requirements.

Fig. 7-13. Vault traveller for the cut and cover method. Courtesy of Alcor.

Copyright fib, all rights reserved. This PDF copy of fib Bulletin 48 is intended for use and/or distribution only within National Member Groups of fib.

Fig. 7-14. Cross view. Notice the space to allow the passing of trucks. Courtesy of PERI.

7.5.2 Recommendations for design

In the design process, it is necessary to consider not only the structural aspects but also the practical aspects, in order to obtain good performance during construction.

- With respect to the openings in the formwork for concrete, it is necessary to establish the distance from one opening to another in order to avoid concrete segregation problems, ensure good compactness, etc
- It is necessary to provide adequate measures to compact concrete. It is possible to use clamp-on vibrators on the formwork, and sometimes it is necessary to use internal vibration with the help of windows and poker vibrators.
- A passage for heavy construction vehicles through the formwork frames is necessary in order to allow access to the tunnel face.
- All activities to move the form-traveller must be carried out in a safe and efficient manner. Sufficient access ladders and platforms must be provided. Interferences during movement must be identified.
- In case of using self-compacting concrete, higher concrete pressures must be taken into account.
- It is possible to apply thermal treatment measures in order to decrease cracks due to shrinkage. The temperature of concrete is not the same in all parts of the cross section. Therefore it is possible to install special equipment to transfer heat from one place to another.

Copyright fib, all rights reserved. This PDF copy of fib Bulletin 48 is intended for use and/or distribution only within National Member Groups of fib.

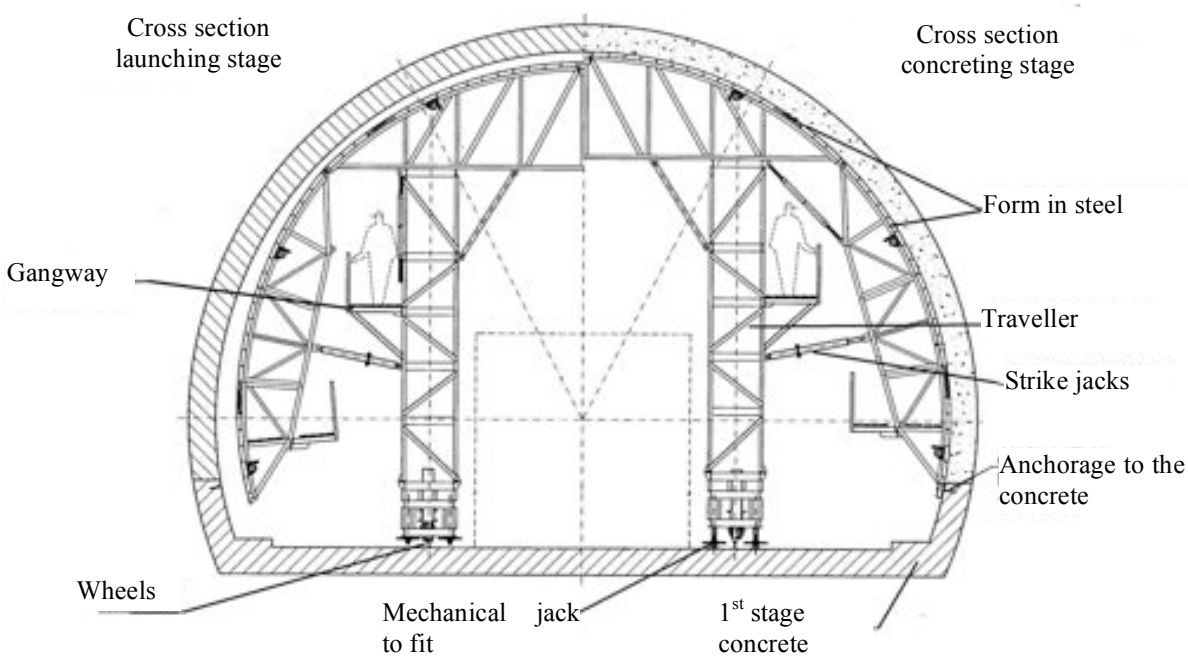

Fig. 7-15. Cross-section. Notice the movement for striking on the right part.

7.5.3 Recommendations for site work

During the first concreting, it is necessary to check the assumptions and conclusions made during design. It is especially necessary to check that there are sufficient openings in order to obtain adequately compacted concrete cast in-situ. Measures to compact concrete must be checked and corrected.

In case of thermal treatment, it is necessary to measure temperatures, checking the behaviour of the equipment.

An important factor to consider is the concrete pressure on the formwork, which has a relation with concreting speed and temperature. Variations of these parameters could cause increases in pressures. Any sign that indicates the possibility of collapse, such as excessive deflections, must be detected immediately. Also, during first concreting it is necessary to check joints in order to detect any leak of grout.

In the case of cut and cover tunnels, it is necessary to ensure that concreting operations follow the assumptions made in the design of the permanent structure. Sometimes an important contribution of the lateral ground pressure is taken into account in the structural calculation of the vault. The construction process must ensure that such assumptions are valid. Some solutions are:

- Lateral concrete walls without external formwork against the rock.
- Further excavations in order to have enough space to allow good compacting of the filling.
- Filling of the space between side walls and rock using ground stabilized with cement, which increases its stiffness.

Copyright fib, all rights reserved. This PDF copy of fib Bulletin 48 is intended for use and/or distribution only within National Member Groups of fib.

Fig. 7-16. Formwork for a bored tunnel with self-compacting concrete. Courtesy of Ferrovial Agroman.

Curing measures are especially important in cut and cover solutions if there is no external formwork in the top of the vault.

7.5.4 Recommendations for striking and dismantling

Striking must be done with hydraulic jacks, avoiding violent actions.

7.6 Travelling formwork – Movable shuttering system

7.6.1 Definition

Special equipment is used for the concreting process of bridge decks built with the span-by-span method. This method uses an elongated girder for spanning between adjacent bridge piers, supporting the formwork for cast in situ decks or precast elements.

The main element is a steel beam (usually a lattice), which can support a complete span of a bridge while concrete is gaining sufficient strength. On top of the lattice there is a formwork for the “cast in place” method, or a number of trolleys for the “pre-cast segments” method.

The longitudinal steel beams could be supported by the permanent piers, by means of transverse beams, or by temporary piers. The beams are suspended from the end of the previous segment.

Since it is mobile equipment, it may also be considered as a machine, and must therefore fulfil special standards. This involves greater difficulties and risks, which must be taken into account by all workers.

Copyright fib, all rights reserved. This PDF copy of fib Bulletin 48 is intended for use and/or distribution only within National Member Groups of fib.

Fig. 7-17. Underslung traveller, cast in place. Courtesy of Ferrovial-Agroman.

Fig. 7-18. Span by span method with pre-cast segments. Courtesy of Ferrovial-Agroman.

This type of traveller may be classified according to its position with respect to the deck:

- Under-slung traveller girder (lower position). The main beams are below the deck, supporting the formwork by means of transverse elements, the shape of which follows the profile of the cross section of the deck. The problem of interference with piers can be solved by introducing a transverse movement in each half of the falsework, or by twisting the bottom part of the formwork. Use of this type of traveller has the advantage of keeping free the upper part of the deck, and makes it easier to arrange mounting of the prefixed steel cages (see Fig. 7-17).

- Overhead traveller girder (upper position). In this case, the longitudinal beams are located on top of the deck, while the formwork and the transversal beams are suspended from them. This system has some advantages: for example it allows working with smaller vertical clearances and smaller radii in plane. The main disadvantage is the interference caused by the hanging bars on the precast reinforcement. However this problem is avoided if hanging the form from lateral beams (see Fig. 7-17 and Fig. 7-20).

Copyright fib, all rights reserved. This PDF copy of fib Bulletin 48 is intended for use and/or distribution only within National Member Groups of fib.

These travellers may also be classified according to the construction process:

- Travellers for cast in place concrete.
- Travellers for span by span precast segments. In this case each segment is supported by trolleys which run along the main trusses.

Fig. 7-19. Over-head traveller. Notice the system to bear the formwork keeping free the space over the deck. Courtesy of BAM Civil.

Fig. 7-20. Pre-cast segments hanging from the traveller. Courtesy of Ferrovial-Agroman.

Copyright fib, all rights reserved. This PDF copy of fib Bulletin 48 is intended for use and/or distribution only within National Member Groups of fib.

7.6.2 Recommendations for design

Dependant upon the cross section of the deck, there are important differences between different types of equipment (see Fig. 7-21):

- Box section. This is the usual cross section for the longest spans (40 to 60 meters). Usually the main problem is that the diaphragms over piers, and the transverse beams for the pre-stress anchorage, hinder the internal formwork movement.

- Hollow slab. It is usually designed for a span length between 30 and 40 meters. In this case there is no internal formwork. Instead, voids are formed in the section using polystyrene, avoiding the problems of box-frame sections. The main disadvantage is that the weight reduction of the resulting section is small in relation with the total volume.

- Pi section. In this case there is no internal formwork and the section is very light. The main problem is that it has a very small area in its lower part to resist compressive stress due to negative bending moments in the sections over piers. This can be solved by using a greater depth of the section, by increasing the strength of the concrete or by making wider webs. Pi "upside-down" (inverted) cross section is possible in some bridges (see illustration).

- Bi-spinal section. It is similar to the previously described section, but with wider, voided webs, increasing the compression area able to resist negative bending moments. In both cases, the main problem is to resolve the various design issues around the pre-stress anchorages. Some solutions for example blocks or ribs have the disadvantage of interfering with the formwork.

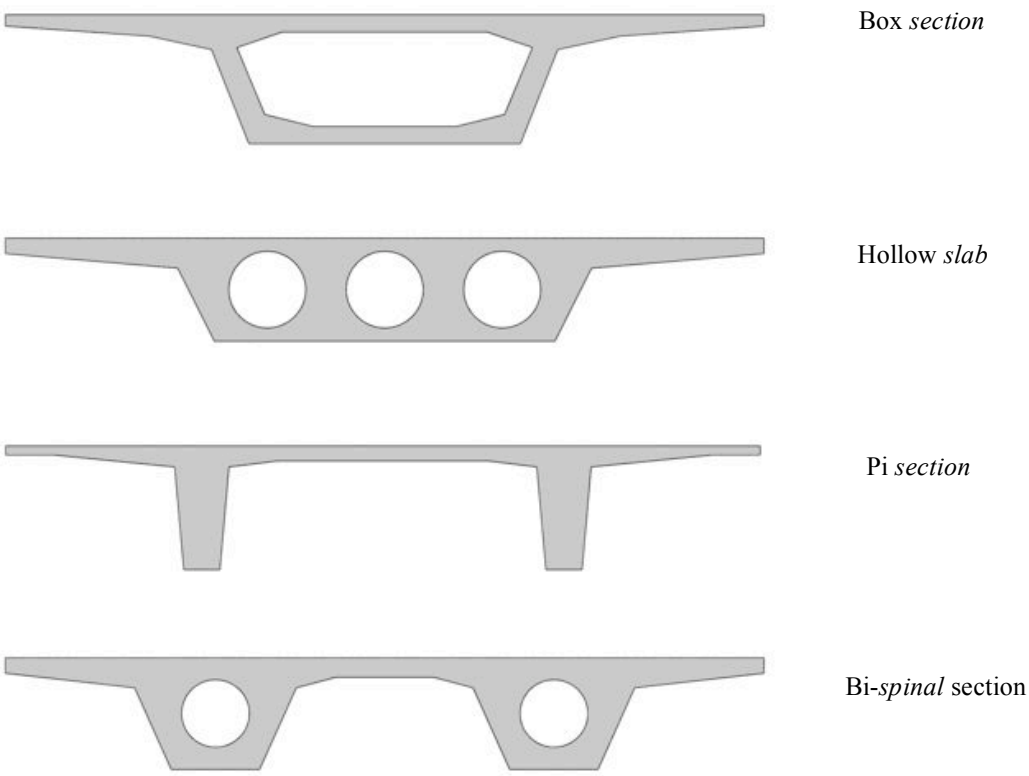

Fig. 7-21. Types of cross sections.

Copyright fib, all rights reserved. This PDF copy of fib Bulletin 48 is intended for use and/or distribution only within National Member Groups of fib.

Fig. 7-22. Traveller for a Pi upside-down cross section. Courtesy of BAM Civil.

The main elements of this equipment are:

- Longitudinal beams, usually trusses to minimize weight. Only in some instances, such as heavy decks and short span length, would beams with solid webs be used to resist shear forces.
- Transverse beams and formwork. They have the transverse shape of the deck, and must be rearranged to pass through pier regions.
- Internal formwork. Generally it is possible to fold internal formwork to enable it to pass through the diaphragm of the pier. Suitable design of the diaphragm must be performed (see illustration).
- Transverse cantilever beams in piers. They allow the bearing of main longitudinal beams.
- Rear-hanging element. This gives support to longitudinal beams in continuous deck solutions, in which the connection takes place in an intermediate section (1/5 span length distance from pier).

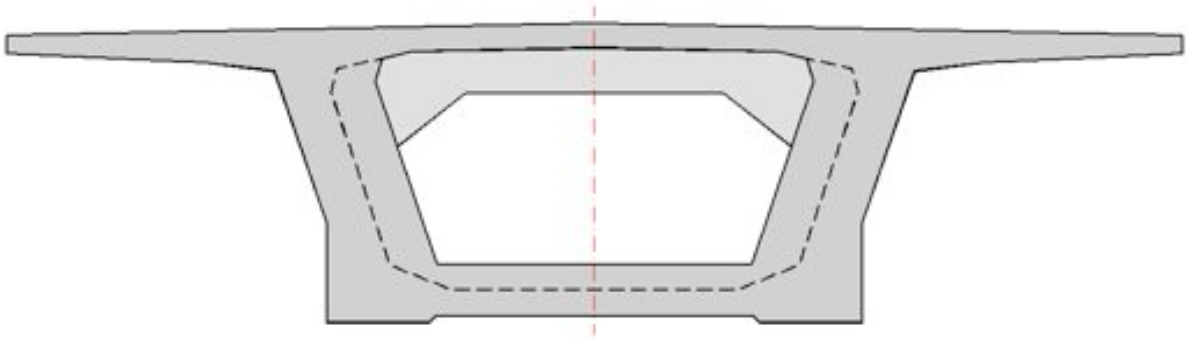

Fig. 7-23. Detail of diaphragm to allow passing of internal formwork.

Copyright fib, all rights reserved. This PDF copy of fib Bulletin 48 is intended for use and/or distribution only within National Member Groups of fib.

Construction process must be taken into account in both transverse and longitudinal directions:

- Longitudinal process. In general there are three possibilities:
  - Continuous deck. In this case during each cycle it is necessary to complete a span with construction joints at 1/5 span lengths from the support point.
  - Second phase continuous deck. Firstly, a simple supported beam is built using the form traveller in a span. After traveller has been launched and the next span has been concreted, reinforcement or prestressing make the concrete joint to guarantee the continuity of the beam. This method has been frequently used for precast segments.
  - Simple supported beam. The method considers that a simply supported scheme operates from the first stage to the last.
- Transverse process. Several procedures are possible for placing the concrete of the deck:
  - The most commonly used option is concreting the full section (see Fig.7-24). In this case the bottom slab has no upper formwork, so the process starts in the joint between webs and bottom slab, followed by the concreting of the bottom slab. The concrete of the webs is placed next, once the previous concrete has gained enough strength to avoid displacements due to the weight of the webs. The last step is the concreting of the upper slab. Another option is to use self-compacting concrete. In this case operations are easier, but it requires upper formwork for the bottom slab, and concrete pressure is much higher.
  - In case of dividing the process in two steps (see Fig. 7-25), the concrete placed first hardens before concreting the second phase. It is very important to take into account the deformations due to this second phase weight, which may produce cracks in the previous concrete. In order to avoid this problem it is necessary to limit the first stage to the bottom slab, because its stiffness allows sufficient deformation without cracks.

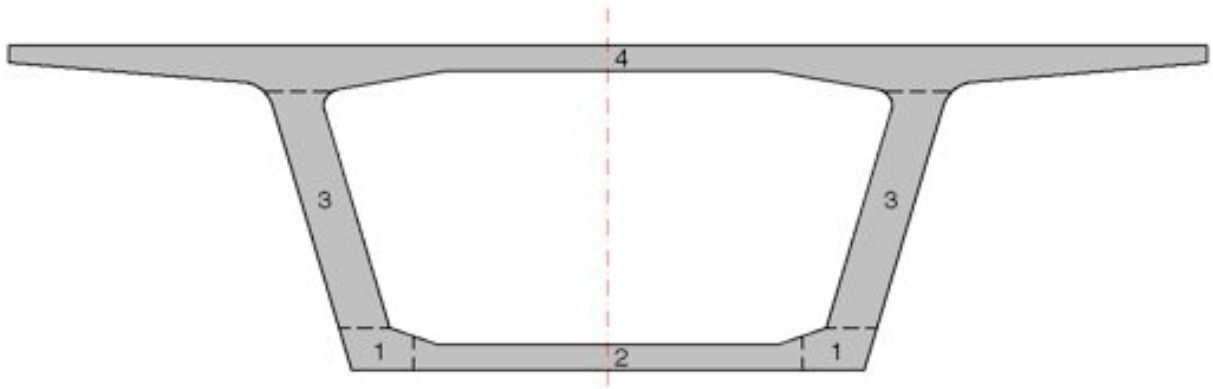

Fig. 7-24. Stages of concrete with whole cross-section.

Copyright fib, all rights reserved. This PDF copy of fib Bulletin 48 is intended for use and/or distribution only within National Member Groups of fib.

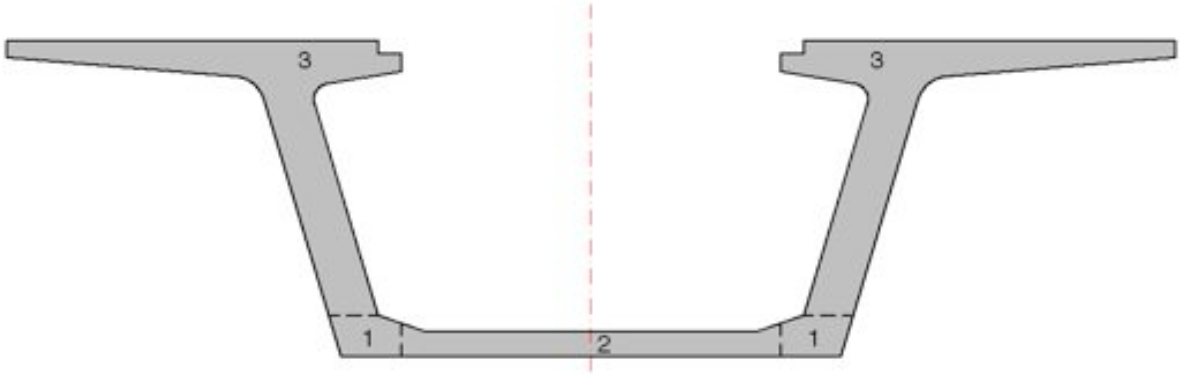

Fig. 7-25. Stages of concrete with partial cross-section.

- An alternative solution is to introduce part of the pre-stressing forces in the first phase, avoiding the problems discussed above.
- Finally, it is possible to place the concrete for the entire section except the part of the upper slab between webs. This procedure is used for very long spans to decrease the weight supported by the traveller. This process has an important effect in the permanent structure stresses, which must be taken into account during the design of the deck.

Specific recommendations for the form-traveller design are:

- Forces on the traveller depend on the connection between different elements of the formwork, the permanent structure, and each stage of the construction process.
- Deflections of the formwork may affect stresses in concrete, especially when concreting a cross section in different stages.
- Deflections of the formwork must be compensated with cambers. These deflections may be higher than calculated, due to small displacements in joints, especially if non-pre-stressed bolts are used.
- Sufficient space must be left to pass internal formwork through diaphragms.
- The design of this equipment is closely related to the design of the deck. In general the formwork is designed for a specific deck type, even though it can be re-used to build different kind of decks. In each case it is necessary to carry out a process of adaptation, making rigorous calculations in a similar manner as used for the first design.
- The main action on the traveller is usually the weight of the concrete. However, it is necessary to study the launching of the formwork, because some elements can experience more severe conditions. All positions during launching must be studied, especially from a stability point of view.
- The safety conditions of these travellers can be improved by applying the following two concepts:

Copyright fib, all rights reserved. This PDF copy of fib Bulletin 48 is intended for use and/or distribution only within National Member Groups of fib.

  - Duplication of essential elements. There are some elements, which in case of failure would produce structural collapse. It is necessary to include additional elements or alternative mechanisms to avoid collapse, limiting damage as much as possible.

  - Measures to avoid dangerous situations. The use of buffers, for example to stop the movement of the travellers at a certain position.

- During the design of transverse beams (fixed in piers) it is necessary to take into account not only vertical loads, but also horizontal loads due to wind and other dynamic actions, such as sudden braking. The maximum wind speed in which any movement would be permitted is usually limited to 35 km/hr. Its effect must be calculated in detail. The eccentricities must be consistent with the permitted tolerance.

- Local effects may be important (local bending moments in upper and lower chords in the main truss), during both concreting and movement.

- Longitudinal and transverse slopes must be taken into account. Modification to a variable slope requires mechanical jacks to fit the formwork. The transverse slope would be solved by adjusting the height of the supports of both trusses.

- Curved alignment. Curves are obtained by transverse displacement of the formwork, describing a polygonal shape. This method is limited by the radius of curvature in plan. If there is a very small radius, transverse displacement can move the truss far away from the bearings of the piers.

- Deformations. Pre-cambering is carried out by mechanical jacks below the formwork. It is useful to check the actual deformation in the first spans, since it may vary from the theoretical value. Pre-camber must take into account:

  - Deformation due to different stages during bridge construction.
  - Final desired geometry.
  - Traveller deformations under concrete weight. Gaps between joints must be taken into account, since they increase deflections.

Fig. 7-26. Traveller with intermediate supports. Courtesy of Ferrovial-Agroman.

Copyright fib, all rights reserved. This PDF copy of fib Bulletin 48 is intended for use and/or distribution only within National Member Groups of fib.

- The interaction between traveller and permanent structure is very important, especially if the cross section concreting is carried out in several stages.

- Pre-stressed bars are used in rear-hanging elements, and sometimes in transverse beams supported by piers. All elements around such bars must be designed according to their maximum capacity.

7.6.3 Recommendations for site work

The assembly of the falsework is usually carried out behind the abutment, and so once assembled must pass over that structure, possibly interfering with its construction. Therefore, the abutment is usually built in different phases.

The construction process for each span is usually divided into the following steps:

- The form-traveller moves forward and is fixed in the next position after finishing the previous span. Usually the rear part of the truss is suspended from the end of the previous segment, avoiding discontinuities due to possible movements of the falsework. It is also supported by next piers with the help of trusses.

- Pre-camber correction.

Fig. 7-27. Over-head traveller, opening its formwork. Courtesy of Acciona.

Copyright fib, all rights reserved. This PDF copy of fib Bulletin 48 is intended for use and/or distribution only within National Member Groups of fib.

- Reinforcement of the span. In box-frame sections, the reinforcement of the lower slab and webs is mounted first. The internal falsework, still in the previous span is immediately moved forward and finally, the reinforcement of the upper slab is mounted. The pre-stressing ducts must be mounted during these operations as well. To obtain satisfactory performance, it is necessary to study a pre-assembling of the reinforcement.

- Concreting of the deck. The most common process is to complete concreting in one single phase. However, depending on the resistance of the falsework, it may be possible to design other procedures, always taking into account its deformation.

- Pre-stressing, once the concrete has gained adequate strength.

- Movement of the traveller to the next position. In order to carry out this operation without intermediate supports, the truss must have at least double the span length.

The steps listed above correspond to travellers located below the deck. In decks with curved alignment, the radius must be large enough to allow the trusses to bear on both piers and rear support.

The process of assembly and construction of the two or three first spans takes a large amount of time, so a minimum number of spans are needed for the method to be economically viable.

Safety aspects must be incorporated in the operation manual for the form-traveller. It must clearly show all rules, specifying forbidden and permissible operations. A good safety system includes mechanisms to ensure that forbidden operations cannot take place even if the operator makes an error.

Fig. 7-28. Prefixed cages of reinforcement are essential to obtain a good performance. Courtesy of Ferrovial-Agroman.

Copyright fib, all rights reserved. This PDF copy of fib Bulletin 48 is intended for use and/or distribution only within National Member Groups of fib.

The person responsible for the site work must be familiar with the operation manual. The production foreman must ensure that all operations are carried out according to the manual. Even in the event of an unforeseen situation, operations not considered and included in the manual shall be considered as forbidden without firstly consulting the designer and obtaining his approval. This type of structure may be expected to have complex behaviour possibilities and any small change can produce a totally different response with unforeseen consequences.

It is necessary to check that assumptions made in the design take place in reality, and that all geometric dimensions and gaps are suitable to carry out the required operations.

It is important to check that the real concreting procedure has been taken into account during the design.

The falsework structure can be equipped with pressure cells and stress measurement equipment to measure real-time structural response. This can be specially checked during launching where a change in the static response of the falsework depends on the imposed bearing conditions controlled by hydraulic jacks. The design manual should include bearing reaction and deformed shape in key positions of the falsework during launching and concreting.

7.6.4 Recommendations for striking and dismantling

The indications made during design must be followed. If the clearances that can be obtained by jacks or by striking devices are insufficient to free the formwork, the designer must be consulted. Striking must be carried out avoiding sudden movements. The possible risks of instability as a result of loosening elements of the formwork must be taken into consideration.

7.7 Travelling formwork for balance cantilever bridge construction

7.7.1 Definition

This is a travelling formwork for bridges built by means of the free cantilever method and cast in place concrete. The formwork is supported by the longitudinal structure, which carries loads to the previous prestress segment. Equipment equilibrium is assured by means of counterweight or anchorages. This type of bridge construction method is adequate for span lengths greater than 60 meters.

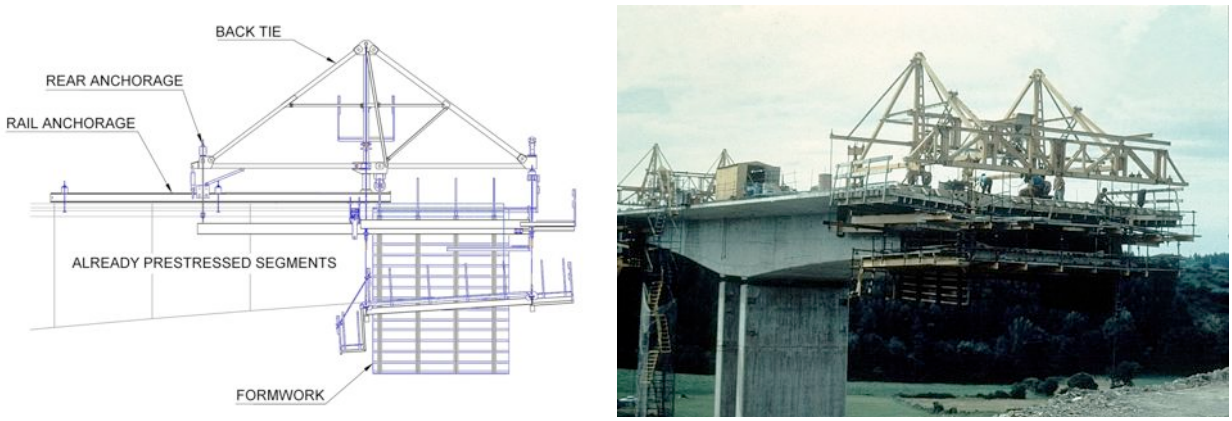

Fig. 7-29. Overhead cantilever formwork with back tie. Courtesy of Ferrovial-Agroman.

Copyright fib, all rights reserved. This PDF copy of fib Bulletin 48 is intended for use and/or distribution only within National Member Groups of fib.

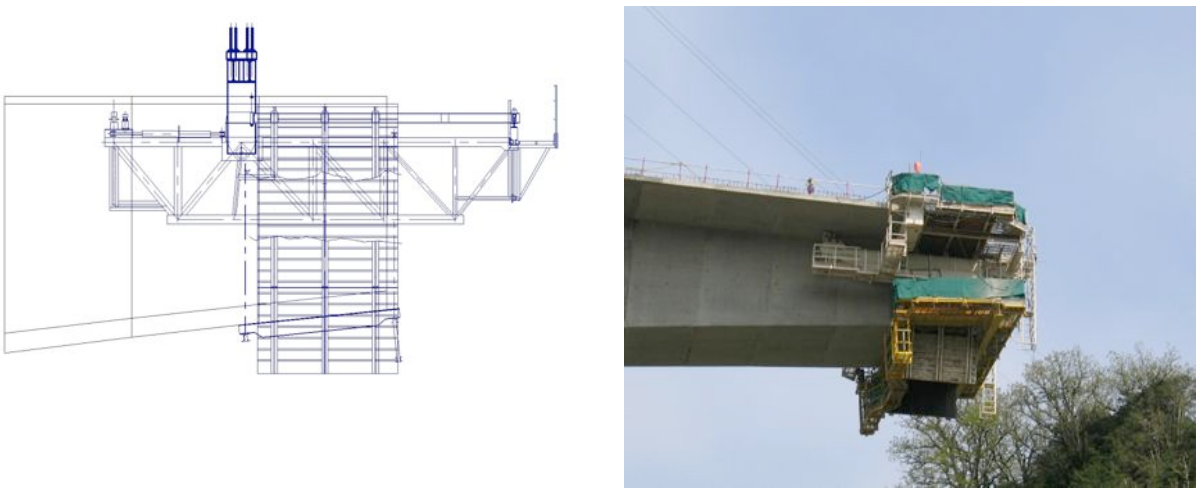

Fig. 7-30. Principle of underslung traveller. Courtesy of Bouygues Travaux Publics.

The construction process begins at the pier, advancing with cantilevers simultaneously in both directions. The segment above the pier is cast first with the help of special formwork that is fitted on the pier. The travellers are then assembled for the concreting of cantilevers in a balanced way. The length of each segment varies from 3 to 5 meters, depending on the load-carrying capacity of the travellers. Therefore, the design of this type of bridges is closely related to the characteristics of the travellers.

Each new segment already prestressed supports the cantilever formwork for the concreting of the next one.

There are two different solutions to design cantilever travellers: either the weight of the segment is carried by two overhead trusses located above the deck (see Fig. 7-29), or the weight of the segment is carried from under the top flange of the deck (see Fig. 7-30). The names of these two solutions are: overhead traveller and underslung traveller.

For both solutions, the traveller must be fixed to the deck by means of pre-stressed bars. A counterweight might also be used, but this solution brings an additional weight onto the deck, which has to be compensated by additional cantilever pre-stressed tendons.

- For the overhead solution, the stability is given by means of anchorage. In this case, an anchorage with pre-stressing bars on the rear end of the traveller transfers tension to the deck and a strut on the front part transfers compression. During the movement of the traveller, the system is changed by another stability system with a special wheel set. Reinforcement fixing is done bar per bar, no pre-assembling being possible.

- For the underslung solution, the steel structure is also fixed to the deck by means of anchorages using pre-stressed bars. A “C” frame placed onto the deck allows for the transfer of the equipment. After transfer, the steel trusses below the deck flanges are connected to the concrete by means of the above-mentioned anchorages. This solution allows for a pre-assembling of reinforcement cages, the erection of the reinforcement cage can be done in one go or in several packages depending on the cranes capacities.

One special type of cantilever formwork is the traveller with variable slope, used basically in the construction of large bridge arches (see Fig. 7-31). It permits also the construction of segments with variable height and width. The supporting structure adapts successively to the slope of the variable arch.

Copyright fib, all rights reserved. This PDF copy of fib Bulletin 48 is intended for use and/or distribution only within National Member Groups of fib.

Fig. 7-31. Two cases of cantilever formwork with variable slope. Left: Arco de Los Tilos (Spain) Courtesy of Ferrovial-Agromán. Right: Bridge over the "bras de la Plaine"(Reunion Island). Courtesy of Bouygues Travaux Publics.

The cyclic process for the construction of a pair of segments of the deck is divided into the following steps:

- Advance of the external formwork.
- Fix layout of the reinforcement steel of the lower slab and webs.
- Advance of the internal formwork.
- Fix layout of the reinforcement steel of the upper slab.
- Concreting of the front and rear segments, in order to produce a balanced situation.
- Pre-stressing cables when concrete strength is adequate.
- Beginning of the next cycle.

There is another falsework element involved in this procedure, which is used for the construction of the first segment (segment 0). Its utilization may require important investment of money and time; sometimes the difficulty related to this activity is underestimated. This first segment must be long enough to allow the assembly of both travellers on top or below of it (see Fig. 7-32). Usually both travellers can be assembled in a special way in order to decrease the space to do so. This must be taken into account in the design of the deck.

When the deck to be built is very wide it could be constructed in two stages: first the main box and then transversal cantilevers with another different formwork traveller (see 7.4).

Copyright fib, all rights reserved. This PDF copy of fib Bulletin 48 is intended for use and/or distribution only within National Member Groups of fib.

Fig. 7-32. Two examples of special formwork for the first segment. Left: courtesy Ferrovial-Agroman; Right: Courtesy of Bouygues Travaux Publics.

7.7.2 Recommendations for design

In this type of bridge there is a close relation between the deck design and the design of the traveller:

- Significant numbers of holes are necessary to be located in the top and bottom slabs to pass hanging bars, which give support to formwork. The alignment of the cantilever prestressing cables must take into account interferences.

- During the design of the deck concrete cantilever deflections must be assessed. The deflection of the traveller must also be taken into account. Usually deflections of the traveller are higher than calculated. A load test is useful to assess such deflections.

- Since most of the formwork hangs from the traveller, the webs are usually vertical, even if the deck has transverse slope. This must be taken into account in the design of the cross section of the deck.

The design of this type of equipment must be checked by (people or qualified engineers) with adequate experience giving special attention to structural safety. A collapse in this type of equipment could have catastrophic consequences. It is necessary to pay special attention to:

- The rear anchoring elements which must be designed in such a way that in case of failure of one bar, their load can be transferred to other elements, preventing the collapse of the entire structure. See figure; notice that four bars of 1000 kN capacity each one is much better than two bars with 2000 kN each.

Copyright fib, all rights reserved. This PDF copy of fib Bulletin 48 is intended for use and/or distribution only within National Member Groups of fib.

Fig. 7-33. Internal formwork. Courtesy of Setra/CTOA, Gerard Forquet.

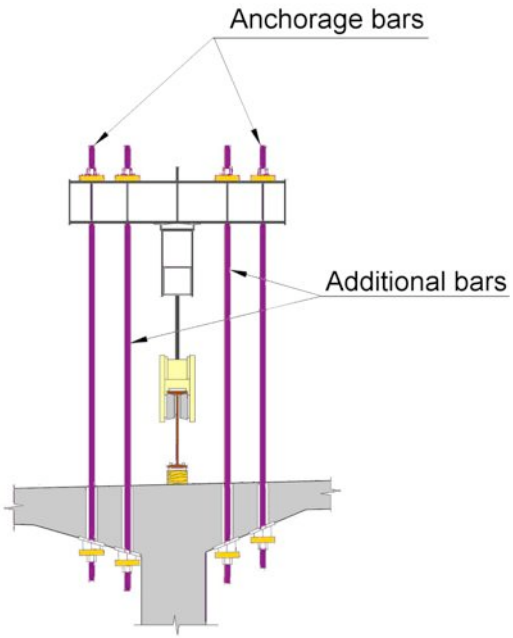

Fig. 7-34. Double rear anchorage.

- Even though the main action on these structures is the weight of concrete, the stage at which the traveller is moved requires special attention. All possible situations during the movement of the traveller must be carefully studied, with respect to resistance and stability, taking into account the compatible wind conditions.

- Since the formwork and the safety platform are attached to the traveller, its design must follow the codes dealing with labour safety.

- These travellers are commonly used in the construction of several bridges. This circumstance requires successive re-uses, each of which must be designed with the same detail and thorough control as the original design.

Copyright fib, all rights reserved. This PDF copy of fib Bulletin 48 is intended for use and/or distribution only within National Member Groups of fib.

Fig. 7-35. Formwork to do the link between both cantilevers. Courtesy of Setra/CTOA, Gerard Forquet.

- The elements which are considered essential for the structure must be specified in the design, in order to assure their close control during construction.

- The design of a traveller must specify the deflections due to concrete loads. If all joints have been designed with high strength bolts, the real deflections will be more accurate compared with those predicted during the design. The effect of deflection may be calculated, but it is better to calibrate the theoretical model with the real displacement after each segment, calculating a coefficient of correction. In practice the greatest deviations between theoretical and real deflection values found in the geometric control of these bridges correspond to displacements of the traveller.

- The link between two cantilevers is carried out by a key segment, built with a formwork that is suspended from their ends (see Fig. 7-35). In most cases the displacement of the cantilevers due to wind and temperature changes is important. Their design must prevent relative displacements between both ends until the pre-stressing force ensures the continuity of the deck.

- The use of conventional falsework is common for the construction of lateral spans. It is therefore necessary to attach the formwork to the cantilever. While the concrete of the link segment is hardening, the relative movement of both segments must be avoided.

During the design of travellers, the manufacturer or supplier must be provided by the engineer responsible at the construction site with all the necessary data to carry out such design. The final design of the cantilever traveller must include the following:

- Final drawings of the equipment.

- Operation manual, describing each step: advance, concreting, striking. The sequence of manoeuvres must be clearly defined, ensuring the safe use of the equipment, and specifying the possible risks. The operating conditions, such as the maximum wind during advance or concreting, must be described.

- Layout of loads in supports and anchorages acting on the deck.

Copyright fib, all rights reserved. This PDF copy of fib Bulletin 48 is intended for use and/or distribution only within National Member Groups of fib.

- Procedures for concreting and assembly of reinforcement.
- Load capacity of cranes for adequate design of the assembly and dismantling manoeuvres.
- Instructions, reports, drawings and sketches to describe the process of assembly.

Fig. 7-36. Progression of the cantilever. Courtesy of Setra/CTOA, Gerard Forquet.

7.7.3 Recommendations for site work

All aspects included in the instructions of assembly, operation and maintenance must be fulfilled.

The wind limitations as specified by the supplier must be taken into account, not only when operating but also when the equipment is out of service, deploying supplementary anchorage systems to resist the maximum wind forces. The movement operations of the traveller must be given special attention by specialized staff.

Following the load layout supplied by the manufacturer, the permanent structures will be validated to support or anchor the equipment.

Fig. 7-37. Accesses in safety conditions must be provided. Courtesy of Setra/CTOA, Gerard Forquet.

Copyright fib, all rights reserved. This PDF copy of fib Bulletin 48 is intended for use and/or distribution only within National Member Groups of fib.

The allowed deflection of the traveller, as specified by the supplier, must be checked on site. The geometric data must be measured before solar radiation starts to increase the upper deck surface, since deformation due to temperature changes (solar gain) may be even higher than load deflections. This problem can be avoided with a suitable gradient control systems based on models that use actual values and automatic measuring devices.

Each re-use of the formwork requires preparation of a new design document. The revised calculations must be as detailed as the original design.

The particular conditions of each site operation will define the additional safety measures that may be necessary, such as signs, lighting, safety nets, etc.

The suspended tie bars, made from high-strength steel, must be checked, making sure there is no damage due to corrosion or welding. All bent bars must be replaced.

Before any concreting is performed, it is necessary to check that the equipment is correctly assembled and supported, and that all anchorage and safety elements are correctly disposed. A checklist can be useful.

Fig. 7-38. The space between cantilevers must be large enough for the removal of the internal formwork. Courtesy of Ferrovial-Agroman.

Fig. 7-39. The wind load action on tall bridges can be quite important. Courtesy of Ferrovial-Agroman.

Copyright fib, all rights reserved. This PDF copy of fib Bulletin 48 is intended for use and/or distribution only within National Member Groups of fib.

These bridges are sometimes designed with unbalanced cantilevers, out of balance by half of a segment; the concreting must start at the shortest cantilever. Any error in the concreting sequence may lead to an overturn of the cantilever.

7.7.4 Recommendations for striking and movement situation

The process of striking of forms and subsequent advance must follow the steps established during design in coordination with the designer before making any modification. It is necessary to prevent loose accessories or tools from falling during the movement of the traveller.

7.8 Apartment formwork

7.8.1 Definition

Apartment formwork as used for the construction of concrete frames. This system allows casting building slabs. The most commonly used systems for shoring of apartment floors are the prop-based systems and the shoring floor tables.

7.8.1.1 Prop system

Props are usually tubular steelwork elements used to support the weight of structural elements such as beams, girders, etc. (see Fig. 7-40). In some instances beams and heavier members may also be found as columns of more sophisticated shoring systems.

One of the main characteristics of the props is their small height in comparison with other shoring systems. This document will only consider props with height less than 5 m.

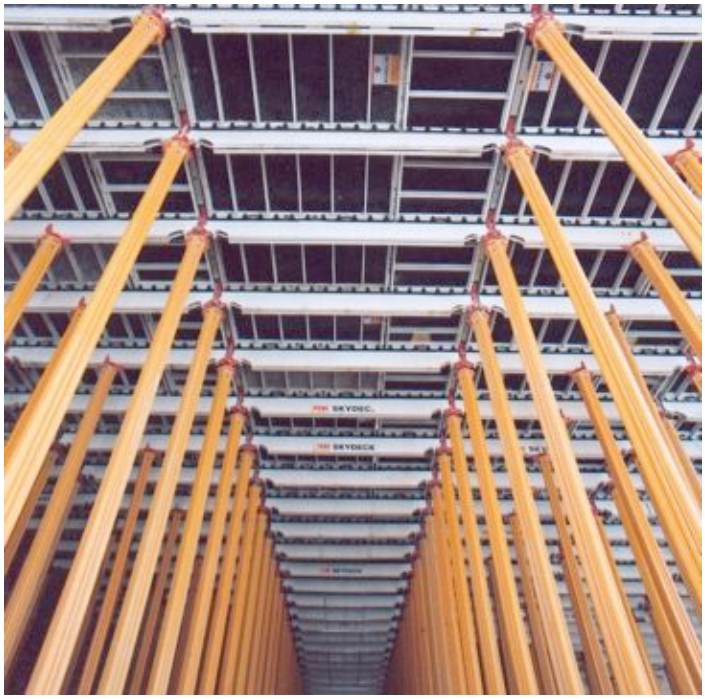

Fig. 7-40. Prop system. Courtesy of PERI.

Copyright fib, all rights reserved. This PDF copy of fib Bulletin 48 is intended for use and/or distribution only within National Member Groups of fib.

7.8.1.2 Shoring floor tables

This system is formed by a series of props, frames and boards creating a single unit, each one with a high load capacity (see Fig. 7-41).

The main characteristic lies in the possibility of assembling these units in the vertical direction, reaching significant heights (up to 14 meters), and maintaining the manoeuvrability of the system.

Fig. 7-41. Shoring floor system. Courtesy of PERI.

7.8.2 Recommendations for design

Since these elements are proprietary systems, the supplier should give the necessary technical data, including the structural verification. Technical data should include ultimate bearing load, usage conditions and assembling procedure as well as tolerances.

The minimum amounts of required bracing must be specified and floor-striking operations must be programmed.

7.8.3 Recommendations for site work

Tightness of nuts and screw jacks, bracing and verticality must be checked before charging the shoring.

It is also necessary to verify the suitable process to strike the formwork.

7.8.4 Recommendations for striking

The striking age is one of the main factors to contribute to an efficient construction of an apartment building. An early striking age is required to maintain an acceptable construction speed.

Therefore, it is essential to achieve an early striking age and maintaining the global structural integrity at the same time. The next chapter concerns striking age calculation.

Copyright fib, all rights reserved. This PDF copy of fib Bulletin 48 is intended for use and/or distribution only within National Member Groups of fib.

Fig. 7-42. With taller props special bracing must be provided. Courtesy of PERI.

7.8.4.1 Striking and stripping

The falsework and formwork of the apartment floors will not be removed until the concrete has gained sufficient strength to resist the stresses and strains arising from the striking process without suffering any structural damage or excessive cracking.

These following actions and procedures must be taken into account to evaluate the striking time:

- Concrete weight, representing the largest fraction of the total load.
- Imposed loads, such as self weight of elements over the floor, construction live loads, etc.
- Shoring and striking sequence, temporary loads due to the action of jacks and other supports.
- Certain elements can remain throughout the whole process in order to reduce deflections or to guarantee the global stability of the structure, for example cross bracing for wind action.
- Deformations during stressing process.
- Shoring must be capable throughout the whole process, of resisting the actions generated by the striking.
- Environmental conditions affecting concrete once the formwork is removed and actions if any, to protect the concrete from these conditions.
- After striking any element that could restrain the movement of expansion joints, pin joints or hinges, must be removed.

Copyright fib, all rights reserved. This PDF copy of fib Bulletin 48 is intended for use and/or distribution only within National Member Groups of fib.

- In special cases or when the building schedule requires quick flooring striking, additional testing should be carried out to estimate the strength and longitudinal deformation modulus of concrete at different ages.

In some occasions it is recommended that measurement of deflections of certain elements as an index should be performed to enable a decision as to whether to continue the striking of the structure or to stop the process. Load testing might be requested as a result of great deflections observed.

Striking and formwork removal should be accomplished in a progressive way, trying to avoid impact with the structure. It is recommended that auxiliary elements necessary to achieve a uniform and gradual descent should be used.

The whole striking process must be completed according to a striking program. It must include all the stages and loads implied in the process in order to ensure global security of the structure during the construction.

These are the two basic requirements for the striking of a structure:

- A well-defined plan of the whole process that does not omit any load or stage from structural analysis.

- To fulfil the appropriate concrete age prior to striking each floor. It should be realized that early striking will lead to increased creep and deformations.

Fig. 7-43. Disassembling. Courtesy of PERI.

Copyright fib, all rights reserved. This PDF copy of fib Bulletin 48 is intended for use and/or distribution only within National Member Groups of fib.

Some recommendations to achieve proper striking are:

- Slight structure up-lift, as may happen in post-tensioned structures. In this way, uniform and progressive load transfer occurs between the shoring and the structure. In some other cases, the transfer may be produced by restrained elongation generated by a temperature increase due to solar heating.

- A gradual and well-planned striking of the shoring will help the structure to reach its deformed shape. This operation must be carried out step by step if necessary lowering the shoring from the centre of the span to the supports. This controlled descent will be proportional to the total deflection due to the self-weight load.

These two procedures allow a second shoring, once the load in the props has been discharged and that load taken up by the structure. In this way, the structure re-shored can help to resist future construction loads.

Fig. 7-44. Some proprietary system has safety facilities already implemented. Courtesy of PERI.

7.8.4.2 Calculation of striking at an early age

The earliest age permissible for striking operations depends on several factors, such as strength and modulus of elasticity evolution in time for the concrete, the curing process and proportion of dead load in the striking moment.

There are a number of methods for this calculation:

- Exhaustive methods based on concrete tensile strength:
  - Splitting tensile strength test.
  - Tensile strength reference curves.
- Non-destructive methods. They are based in the ratio between the total load in service and the load applied immediately after striking.

7.8.4.3 Load transmission during construction

A high speed of construction is often required for apartment buildings with the distribution of the construction load to several already built floors.

Copyright fib, all rights reserved. This PDF copy of fib Bulletin 48 is intended for use and/or distribution only within National Member Groups of fib.

This load distribution must be studied in order to be aware at all times of the amount of load acting on each floor.

Usually a few assumptions will have to be made to enable estimation of the loads on each floor:

- The stiffness of the different floors is the same.
- The shoring is much stiffer than floors.
- The ground floor shoring lies on infinitely stiff soil.
- Creep and shrinkage are not considered.

The load affecting each floor can be calculated according to the following rules:

- The weight of a new floor is distributed among the number of shored floors in equal parts.
- When striking one floor, the difference between the load it supported and its self-weight, is divided among the remaining shored floors.

To minimize the load affecting the different floors, the shoring-striking procedure should be taken into account. This procedure consists in striking the floor when possible allowing the structure to take its deformed shape. A re-shoring process would then be required to guarantee proper transmission of the loads to the rest of the structure.

7.9 Self-launching gantries

7.9.1 Definition

A launching gantry is an item of equipment used to mount pre-cast beams or segments. In each case it would be described as an overhead launching gantry. In the case of launchers for segments the process is the free cantilever. Such gantries cannot support a complete span.

7.9.2 Recommendations for design

It should be noted that a launching gantry is a very special item of equipment, and its performance is similar to that of a big crane. The tendency during the last years has been to increase the capacity to launch segments farther and construct bridges with greater span lengths. The target has been to increase performance with faster equipment, and avoid intermediate gantry bearing movements. The result has been a type of truss with higher structural capacity but more weight. Nowadays therefore, reactions from the gantry are a very important load item on the bridge and in most cases would define the required prestress of the cantilever of the deck. With a higher capacity it is possible to put all bearings of the truss near the pier and even although the reaction could be higher, the bending moment could be smaller. In such cases it is very important to check the shear in joints.

When erecting segments and in some cases beams, it is essential to take into account the interaction between falsework, permanent structure and the construction process. It is especially important to compute reactions of the launcher on the deck for each construction stage in order to check stresses in each section of the deck. In the case of an indeterminate structural scheme for launcher supports, it is necessary to implement a system to check reactions (e.g. jacks or load cells for measurement of reactions).

Copyright fib, all rights reserved. This PDF copy of fib Bulletin 48 is intended for use and/or distribution only within National Member Groups of fib.

Fig. 7-45. Launcher for cantilever segments. Courtesy of Ferrovial-Agroman.

For every different use, it is necessary to design the launching procedure and prepare its appropriate operation manual, which must include:

- All positions and movements for the launching process.
- Maximum reactions in each position. In case of significant deck deflections, the redistribution of launcher reactions must be taken into account.
- Use of longitudinal and transverse anchorages in order to restrain movements.

In the case of segment launching the coordination between the falsework designer and the bridge designer is essential, since the characteristics of each element determine the design of the other. Experience of the designer of the permanent structure and of the launcher is of great importance in this kind of structure.

As with any other falsework machinery it must fulfil all specific related codes.

Following the instructions supplied by the manufacturer all the different positions of the launching truss over the bridge must be analyzed, defining all loads. It is important to consider that small loads may cause very unfavourable situations depending on their position.

Drawings must contain all necessary instructions to reach any position, including anchorage points, situation of winches, etc.

Since every new bridge is unique, it requires a new design.

Copyright fib, all rights reserved. This PDF copy of fib Bulletin 48 is intended for use and/or distribution only within National Member Groups of fib.

Fig. 7-46. Launching precast segments with a very small radius in plane. Courtesy of Bouygues Travaux Publics.

The design of a bridge should not be considered complete until tension and stability are checked during the use of the launching truss including the following aspects:

- Checking of the sections with greatest loads, unions and stiffening elements under concentrated loads.
- Checking that horizontal forces are anchored to a support with sufficient vertical load.
- Checking of the deformation of the structure.

The operation manual must indicate the maximum acceptable wind velocity for which operating is permissible.

Fig. 7-47. Launching a hybrid deck with precast segments and a composite beam. Courtesy of Ferrovial-Agroman.

Copyright fib, all rights reserved. This PDF copy of fib Bulletin 48 is intended for use and/or distribution only within National Member Groups of fib.

7.9.3 Recommendations for site work

The site work supervisor must follow what has been established in the design. In case of unforeseen circumstances any required modification necessitates consultation done by the designer, since the smallest change may seriously affect safety.

Before using the launcher for the first time a load test must be carried out to check the positions that result in the greatest loads and also to measure deflections and reactions in supports.

Theoretically, ensuring that the three supports of a launcher are lined up should be sufficient to be certain of correct structural behaviour. However, it is better additionally to check that the reaction in one of the supports matches the designed value. This is the only way to control supports in cases in which the structure is not exactly straight due to manufacturing inaccuracy.

In case supports need to be wedged beyond the jacking capability a filling block will be applied with steel beams or even using timber, paying special attention to its stability, because horizontal forces. The best practice is to use a sandwich of timber beams with a layer in one direction and the next in the transverse direction (two-way direction).

The designer must be consulted before any modification of the traveller or its re-utilization in other bridges, requiring a new specific design.

7.10 Ready-for-use falseworks

7.10.1 Definition

Commonly used falsework for concrete slabs are being used for structures built with pre-designed equipment such as towers, beams, props, braces, mechanical jacks, etc. This pre-designed equipment must include relevant documentation and utilization instructions.

Specific recommendations:

The tendency is to satisfy two opposite requirements:

- Lightweight pieces for an easy assembly.
- Sufficient strength to resist design loads.

Both requirements can be satisfied with high resistance steel, but deformation problems appear.

Other specific recommendations:

- When using towers the recommendations listed in the next section must be followed.
- Pre-designed equipment must follow the operation manual.
- Bracing elements in towers require special care. They must fulfil calculation assumptions.
- It is necessary to verify that major loads are correctly located within permissible tolerances.

Copyright fib, all rights reserved. This PDF copy of fib Bulletin 48 is intended for use and/or distribution only within National Member Groups of fib.

- Horizontal components must be checked particularly in cases in which slabs are placed on steep slopes.
- Foundation conditions must be verified before erection and additionally be checked immediately before concreting.
- When heavy loads are applied locally on structural steelwork profile sections, adequate stiffeners must be used.

Some examples of this type of falsework are mentioned in other chapters as bridge shoring or apartment falsework.

7.11 Heavy duty towers

7.11.1 Definition

These towers can be used as support for pre-cast structures or as temporary supports while a structure is being built. The difference between a tower and a prop is that the first is self supporting and so as a minimum is composed of three props.

Fig. 7-48. Examples of towers used to bear pre-cast concrete elements. Left: Courtesy of RMD. Right: Courtesy of Alvisa.

7.11.2 Description

The principal difference between heavy and light towers is quantitative, since they bear loads of different magnitude. Towers with a higher load capacity have problems that are negligible in lighter towers. This section analyzes towers with the highest capacities, named “heavy duty towers”.

These towers are used as temporary structures, with a height of 20 meters or more. They are used to assemble pre-cast elements of concrete or steel, which require temporary bearing structures to support certain pieces or to assure stability against overturning. There are also used in cases of repair (bearings substitution, structure modifications, etc.), temporary unusual overloads (cranes) and demolitions. They can also be used for the temporary bearing of travellers during their construction or movement.

Copyright fib, all rights reserved. This PDF copy of fib Bulletin 48 is intended for use and/or distribution only within National Member Groups of fib.

Fig. 7-49. Towers used for the temporary bearing of constructive solutions using travellers. Left courtesy of Ferrovial-Agroman. Right courtesy of RMD.

7.11.3 Recommendations for design

General recommendations are:

- An equally shared load among different props of the tower must be achieved with adequate devices.
- Small gaps in props can change load distribution (see 7.11.5).
- Devices to assure the centring and verticality of loads should be used.
- It is preferable to support large loads with a few strong elements than with many weaker elements. This is due to the design complication for safe load distribution system, and the risk of "consecutive failures".
- Sometimes stays may be connected to fixed points in a tower. In these cases the stay elongations must be taken into account when computing the stiffness of the tower.

Fig. 7-50. Tower as temporary support. Courtesy of Setra/CTOA, Gerard Forquet.

Copyright fib, all rights reserved. This PDF copy of fib Bulletin 48 is intended for use and/or distribution only within National Member Groups of fib.

Fig. 7-51. Towers bearing a falsework. Courtesy of Setra/CTOA, Gerard Forquet.

In towers with joints without pre-stressed bolts, the real deformation can be greater than the designed value. This happens because the structure may loosen because of gaps in tolerance. Even though this effect can be calculated, it is better to apply data from similar cases.

The following aspects must be especially taken into account during design:

- **Increasing and decreasing loads.** Apart from the final nominal loads, it is necessary to analyze the process of construction in the event that higher loads or eccentricities may appear. In any case, the maximum horizontal forces and eccentricities must be checked. Sometimes lower vertical load with higher horizontal actions could be the worst situation.

- **Application of loads**. Details related to this aspect are analyzed in further sections.

- **Adjusting the fit**. In general it is convenient to dispose regulating elements to correct certain errors and facilitate the process of assembly.

- **Striking**. It is necessary to analyze and define the striking process in order to prevent any kind of overload in any part of the structure. Before unloading the bearing structure, it is necessary to predict the deformation it will produce on the supported structure. Such deformation will determine the adequate unloading sequence. The establishment of striking stages, and controlling deformations and forces may be useful, since they will be necessary in case of stroke reversal.

Since towers transfer higher and more concentrated loads, the associated foundations are also larger than those used in shoring falsework. There are different types of foundations, such as isolated concrete footing, auxiliary substructures, slabs, or permanent existing structures.

Copyright fib, all rights reserved. This PDF copy of fib Bulletin 48 is intended for use and/or distribution only within National Member Groups of fib.

Fig. 7-52. Bearing a composite bridge during assembly. Courtesy of RMD.

7.11.4 Recommendations for site work

Essential aspects to be checked are the following:

- It is necessary to check that assembly has been carried out as established during design. Joints, stiffening elements, foundations and centring of loads, must all be checked before applying the load. A checklist is useful in these cases.
- It is necessary to make sure that the general geometry and eccentricities are within the specified tolerances before applying the load.
- Before loading the bearing tower, its foundation must be checked. Further periodic revisions are necessary after applying the load, in order to detect possible changes in the support conditions. Since vertical loads are higher, the design and construction of foundations have a greater importance, and a technical inspection of the ground bearing surface is required.

7.11.5 Recommendations for striking

All the specified indications in the design must be strictly followed. If the stroke of the jacks is not sufficient to unload the falsework, it is necessary to study the way to reverse the jack stroke. This operation should not be improvised. Instead, the points of support must be previously studied.

The striking must be carried out in such way that the structure is loaded gradually, lowering the top supports of the towers in different stages and controlling the development of loads.

Copyright fib, all rights reserved. This PDF copy of fib Bulletin 48 is intended for use and/or distribution only within National Member Groups of fib.

7.11.6 Collection of details

This section provides some details and describes effects which have sometimes caused failures in the past.

7.11.6.1 Load application

The application of the loads must be carried out according to the design of the load capacity of the tower, taking into account three essential concepts: centring of loads, load distribution, and vertical load position.

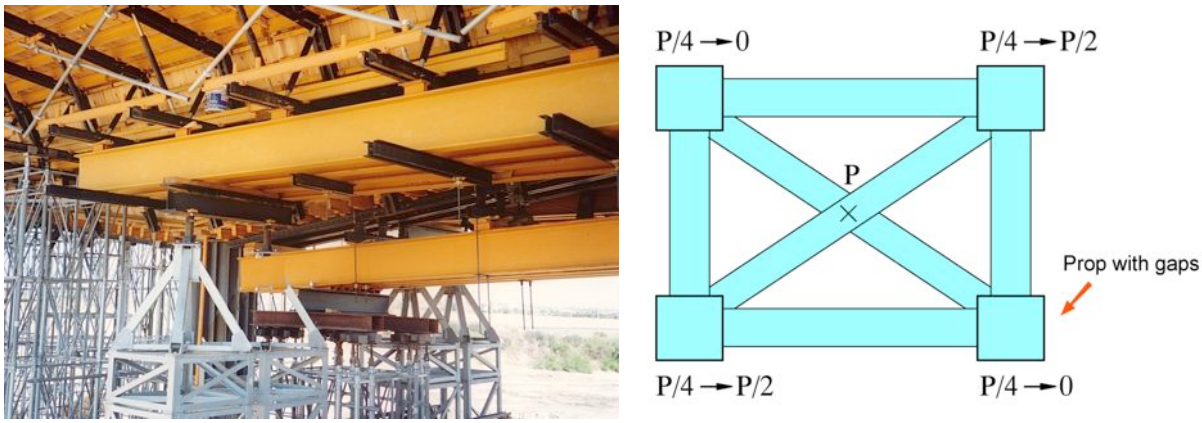

Fig. 7-53. The load may be centred but unequally distributed. Courtesy of Mecanotubo.

a) Centring of loads: guarantees that the tower receives the load from the structure in its geometrical centre.

As shown in Fig. 7-53, a pyramid structure on the top part of the tower guarantees the centring of the load. However, if the pyramid is rigid it does not ensure a uniform distribution of the load. It needs a system of hinges that makes it a statically determinate structure.

b) Load distribution: guarantees that the load is equally distributed among all elements.

In most cases it is necessary to dispose additional elements to assure such distribution. Some important aspects are the following:

Distribution in four points with centred load. The distribution is obviously equal among the four supports, each element receiving one fourth of the load. However, if this structure is too rigid, a slight difference in length of one of the elements causes that element and the opposite one to unload, distributing the entire load among the other two elements, which may now be overloaded. If the structure is less rigid, this effect decreases, since the deformation is higher. It is similar to a four-leg chair with one slightly shorter leg. It is a complex problem, since it is very difficult to represent the effect of the stiffness in computer models. This effect can be avoided by other elements that centre and distribute the load, such as elements with crossed girders (see Fig. 7-54). In this case the distribution is statically determinate, first in one direction and then in the other. Heavy-duty steel beams (HEB or similar) are advised to be stiffened, especially when heavy loads are considered.

Copyright fib, all rights reserved. This PDF copy of fib Bulletin 48 is intended for use and/or distribution only within National Member Groups of fib.

Fig. 7-54. Distribution structure for heavy loads. Courtesy of Ferrovial-Agroman.

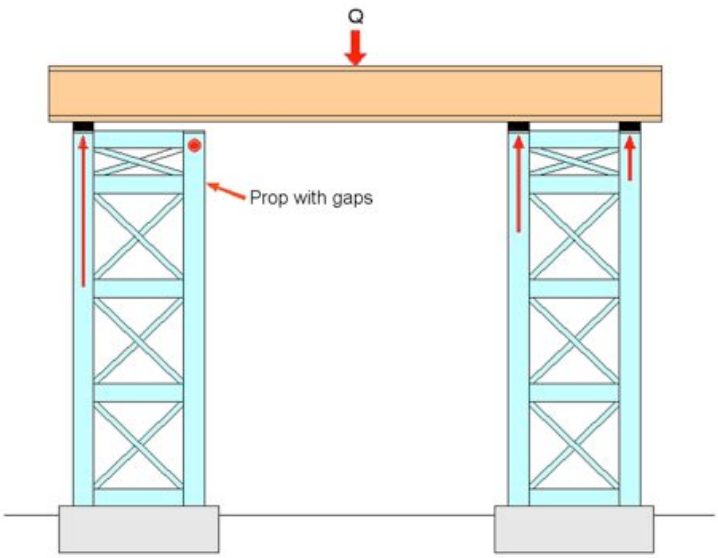

Fig. 7-55. Distribution by means of a continuous girder.

Distribution with continuous girder. In this case a continuous girder distributes loads among four supports. The load in each support is determined by a simple calculation as a continuous girder. However, if the distribution is calculated considering the four supports as springs, the result varies depending on the stiffness of these elements. In the case of a tower formed by stiffened supports with diagonal elements, these must be considered in the calculations since the result varies completely. Moreover, if one of the supports is slightly longer or the continuous girder is not exactly straight, the load may be unequally distributed, which may result in the failure of an element and eventually of the whole structure. This effect increases if the supports are closer to each other (see Fig. 7-55).

Copyright fib, all rights reserved. This PDF copy of fib Bulletin 48 is intended for use and/or distribution only within National Member Groups of fib.

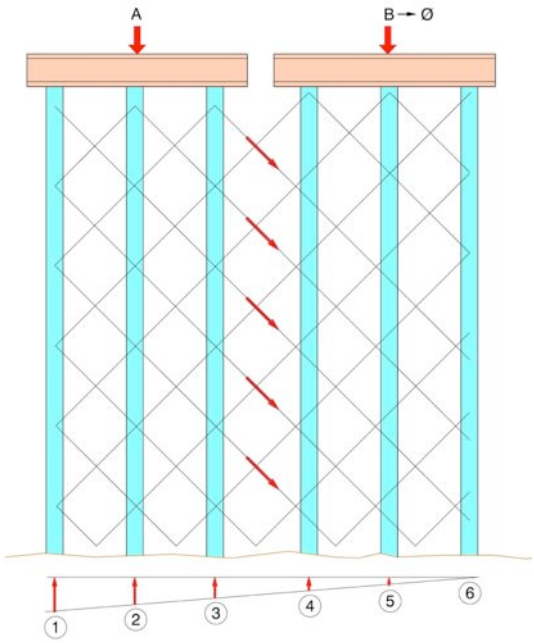

Fig. 7-56. Overload in stiffening element due to a load that is not centred.

Additional loads in collective bracing. In the case of two loads distributed among six supports as shown in Fig. 7-56, if load B disappears, supports 4, 5 and 6 continue transferring load to their foundations, even though the top girder distributes no load to them. The part of the load is carried out by the diagonal bracing. This effect is more important if vertical props are no stiff enough or have gaps in joints. If this effect is not taken into account their bracing joints may break, leaving supports 1, 2 and 3 without any bracing and causing their buckling.

c) Vertical load position: guarantees that the load is applied vertically on the tower, transferring the horizontal component to another point.

The elements and variables related to this concept are analyzed in the section dealing with bridge shoring (7.2), since it is solved using metallic wedges or spherical elements on the jacks.

In any case, all recommendations listed in § 7.2 apply to this concept.

The adaptation to the different inclinations that vary along the structure must be carefully studied in order to avoid inadequate improvised decisions.

It is important to control the opening of jacks, bracing them when necessary. When wedges are used it is necessary to avoid displacement on the inclined planes of wedges.

7.11.6.2 Stiffening or staying

In some cases, towers may be braced or stayed to other concrete structures such as the piers of the bridge. Figure 7-57 shows a tower with stiffening elements attached to a wall.

Staying the tower with ties to resist horizontal forces is not always effective, since the ties have a greater flexibility than the tower and they can absorb a small amount of the force.

In any case, the distribution of the force must be calculated taking into account the real flexibility of each element.

Copyright fib, all rights reserved. This PDF copy of fib Bulletin 48 is intended for use and/or distribution only within National Member Groups of fib.

7.11.6.3 Foundation supports.

If there are problems of stability against overturn due to horizontal forces, it is possible to anchor the foot of the tower to its own foundation. In that case study of complete overturning (foundation and tower) must be done.

Fig. 7-57. Tower with stiffening elements attached to a wall. Courtesy of RMD.

Fig. 7-58. Anchorage regulation elements and stiffened tower. Courtesy of RMD.

7.12 Sacrificial formworks

7.12.1 Definition

Lost piece of formwork which is left in place after hardening of the concrete.

7.12.2 Specific recommendations

Polystyrene pieces for hollow concrete slabs: sufficient measures must be taken to ensure that there are no movements during concreting, especially considering buoyancy uplift pressures.

Boxes of steel mesh with hollow concrete slabs: adequate measures must be implemented in order to avoid cement or mortar inside the hole.

Thin pre-cast slabs (reinforced with bars or fibre or pre-stressed): used as formwork between deck beams. It is important to verify depth of such thin slabs. In the case of pre-stressed slabs, wires must be placed accurately; any small error in position (even 1 cm) is an important percentage of the total depth of the thin slab. Sometimes this produces important variations in deflections among some slabs in the same bridge.

Copyright fib, all rights reserved. This PDF copy of fib Bulletin 48 is intended for use and/or distribution only within National Member Groups of fib.

Appendix A Calculation of fresh concrete pressure

The pressure of the poured concrete mix is a fundamental force to consider for the design of the formwork.

As much as possible, the forces resulting from the pressure should be balanced between opposite faces through formwork ties, to avoid a transmission of forces to the supports. Such a solution is not always possible, either because the opposite forces are far from one another, or because there is only one face with formwork.

There are various theories about modelling the fresh concrete pressure, each of them taking into account different parameters. The designer of formwork should apply the most convenient theory according to the specific conditions of use.

Generally, theories consider two zones. For the upper part, in which the concrete is already fluid, hydrostatical pressures are considered (related to the density of the concrete). At the place where the hardening process starts the pressure becomes constant (see Fig A-1). That maximum pressure depends on several factors, but especially on time when hardening starts and the pouring speed.

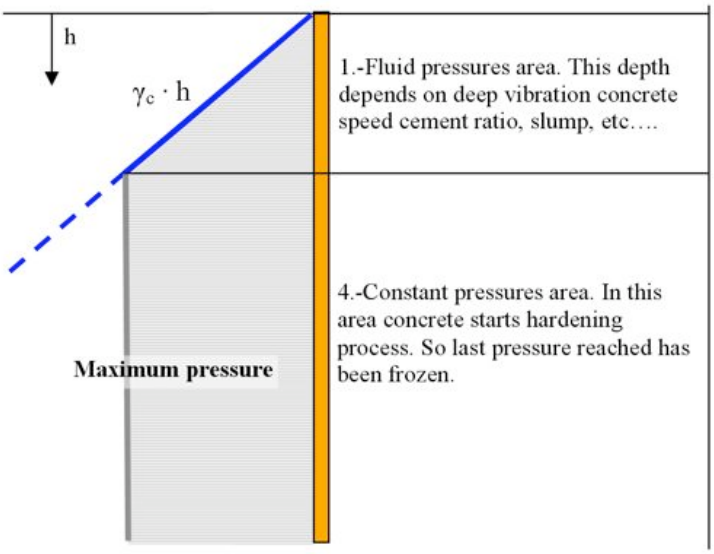

Fig. A-1. Scheme of pressure with granulometrical zone.

Usual factors to consider are:

- Type of aggregates.
- Pouring speed.
- Type of cement.
- Temperature.
- Dimensions.

Copyright fib, all rights reserved. This PDF copy of fib Bulletin 48 is intended for use and/or distribution only within National Member Groups of fib.

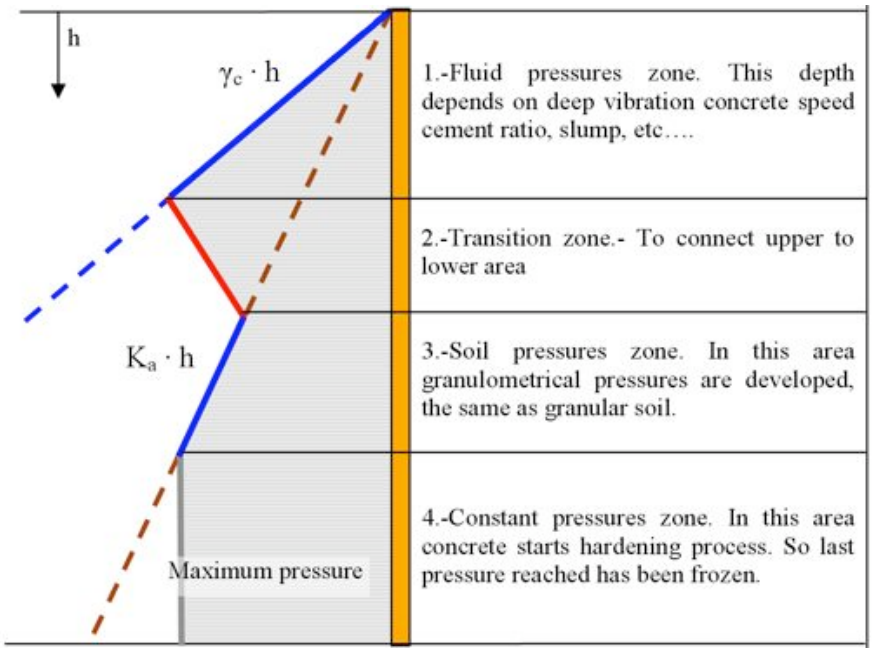

Fig. A-2. Scheme of pressure with granulometrical zone.

Some of theories take into account a zone where the concrete acts as a soil. There is a granular pressure acting (see Fig. A-2) as a ground pressure on a retaining wall (see A.2.3).

Some super-fluidizers are commonly used to facilitate the placing of the concrete without adding water; they usually do not change hardening time but can change the granular pressure zone into a hydrostatical pressures zone. So, a really important increase in pressures is produced, especially if self-compacting concrete is used (it can be cast and compacted without the need of mechanical aid).

A.1 Factors of determination of concrete pressure

A.1.1 Filling speed of pouring the fresh concrete

The fast pouring of concrete with a good regular vibration ensures a good quality of the poured depth without default due to a joint.

In that area of vibration, the concrete is in a semi-liquid state, and the pressure is proportional to the density of the concrete and the depth (hydrostatical pressure zone).

The faster the filling speed is, the higher the maximum pressure.

A.1.2 Hardening temperature

When the temperature decreases, the time of hardening increases and the depth of semi liquid concrete increases; therefore, a decrease in temperature is similar to an increase in the pouring speed (see Fig. A-3).

Copyright fib, all rights reserved. This PDF copy of fib Bulletin 48 is intended for use and/or distribution only within National Member Groups of fib.

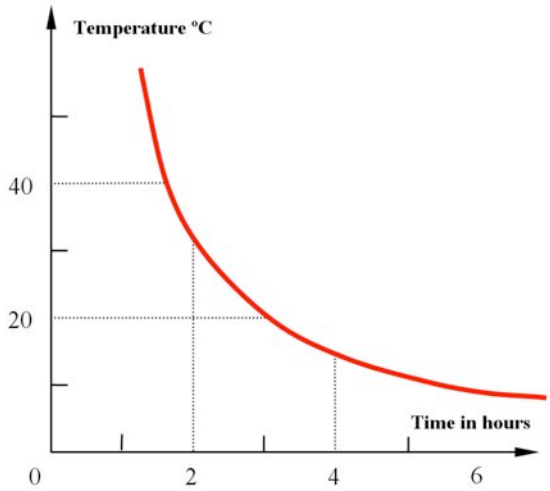

Fig. A-3. Temperature- hardness time relation.

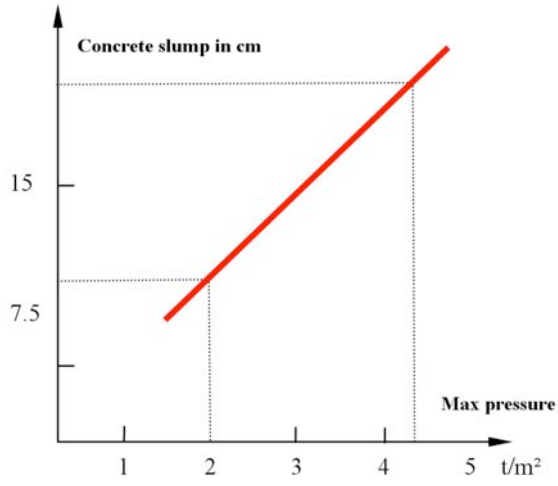

Fig. A-4. Slump – maximum pressure relation.

A.1.3 Workability of fresh concrete (Abraham cone)

A better handiness (workability) means a lower natural slope of fresh concrete: that is to say, a higher active pressure coefficient (relation between active concrete pressure and weight of the considered volume: this pressure is acting in the area where the granular pressure is). Fig. A-4 shows the relation between the slump test result and the maximum pressure.

A.1.4 Slope of the formwork face

The formula to apply is (equivalent to the ground pressure formula):

where

$$k_a = \frac{1+\sin(a-b)}{1+\sin(a+b)}$$

k_a = active pressure factor

a = slope of the face

$a > 0$ if the weight of the concrete is above the face

$a < 0$ opposite

b = natural slope of fresh concrete

The formula indicates that the factor is higher on faces carrying the weight of the concrete.

A.1.5 Vibration depth

In the vibration area, the reduction of cohesion leads to a hydrostatical pressure law.

Copyright fib, all rights reserved. This PDF copy of fib Bulletin 48 is intended for use and/or distribution only within National Member Groups of fib.

The deeper the vibration is, the higher the maximum pressure.

A.1.6 Vibration frequency

If the natural frequency of the formwork structure is similar to the vibrator frequency, there is a risk of resonance. An increase in static pressure should be considered (dynamic amplification factor).

A.1.7 Cement proportion

An increase in cement ratio could produce a higher pressure of the concrete.

A.1.8 Additives

The additives have no direct influence on the pressure. The effect is due to the modification of physical qualities of the mix (for instance: super-fluidizers).

Plasticizers can extend the hydrostatic pressure area to the granular pressure area. That effect could disappear where the hardening area appeared.

Retarders have the same effect as a higher pouring speed.

A.2 Theories of fresh concrete pressure on the formwork

In the following sections, several theories are described for the calculation of concrete pressure, taking into account various factors. The designer should determine the best applying theory, analyzing the effective main factors.

The theories are classified chronologically. The most well-known are the following:

1930 : Portland Cement Association (USA)

1952 : S. Rodin (USA)

1965 : Civil Engineer Research Association, C.E.R.A.

1975 : Société de Diffusion des Technique du Bâtiment et des Travaux Publics

1978 : American Institute, A.C.I 374/78

1980 : Canadian Study from N.J. Garner

1980 : DIN 18218

1982 : J. Martin Palanca (Consejo superior de Investiagtiones científicas)

A.2.1 American code A.C.I. 347/04

<u>Assumptions:</u>

- Cement matrix: Portland cement.
- No retarding agent.
- Abraham cone: 120 mm.

Copyright fib, all rights reserved. This PDF copy of fib Bulletin 48 is intended for use and/or distribution only within National Member Groups of fib.

- No external formwork vibrator.
- Specific weight of concrete mix: 2,4 t/ m^3.

Mathematical model:

- Firstly, a linear increase in the hydrostatic law of pressure up to a maximum value of *Pm*.
- Then, the pressure *Pm* stays constant.

Data:

- Rising speed of concrete pour.
- Temperature of the concrete mix.
- Height of the formwork.

Formula:

A distinction is made between piers and walls:

a) Piers

$$Pm = 0.73 + \frac{80.V}{17.7 + T}$$

Maximum value of *Pm*: 15 t/m² or 2,4 H (t/m²)

b) Walls

V < 2.1 m/h

$$Pm = 0.73 + \frac{80.V}{17.7 + T}$$

2.1 < V < 3 m/h

$$Pm = 0.73 + \frac{117 + 25.V}{17.7 + T}$$

Maximum value of *Pm*:10 t/m² or 2,4 H (t/m²)

V > 3 m/h

$$Pm = 2.37 \text{ x } H$$

Pm without limitation

where:

Pm: maximum pressure of the concrete mix t/m²

V: rising speed of fresh concrete in m/h

T: temperature of the mix in °C

H: depth from the surface in meters

Copyright fib, all rights reserved. This PDF copy of fib Bulletin 48 is intended for use and/or distribution only within National Member Groups of fib.

A.2.2 German standard DIN 18218

Internal vibration

Assumptions:

- Maximum size of aggregates 63 mm.
- Vertical facing with a maximum deviation of +/- 5º from the vertical.
- Specific weight of concrete mix: 2,5 t/m^3.
- Temperature of concrete mix: 15° C.
- Time for hardening: 5 hours maximum.
- Rising speed of concrete mix: 7m/h.

The maximum pressure will be modified taking into account:

- Temperature variation.
- Specific weight variation.
- Retarding agent.

Mathematical model:

This model considers first a hydrostatic pressure increasing up to a maximum value "*Pm*", and then a constant pressure of *Pm*. The constant pressure law is reduced to zero at a depth of 5 x *V* (where *V* is the rising speed of the concrete pour in m/h). This is the best approach for sliding formwork.

Data:

- Rising speed of the concrete pour in m/h.
- Workability of the concrete pour in cm (slump).

Formula:

A distinction is made between piers and walls.

- Piers: maximum value of 10t/m² or 2,5*H*
- Walls: maximum value of 8t/m² or 2,5*H*

Pm: maximum pressure of the concrete mix in t/m²

V: rising speed of fresh concrete in m/h

H: depth in meters

Workability	Abram's slump in cm	*Pm* (t/m²)
Dry	0 – 2	0,5.*V* + 2,1
Plastic	3 – 5	1,0.*V* + 1,9
Soft	6 – 9	1,4.*V* + 1,8
Fluid	10 – 15	1,7.*V* + 1,7

Copyright fib, all rights reserved. This PDF copy of fib Bulletin 48 is intended for use and/or distribution only within National Member Groups of fib.

Temperature effect on the fresh concrete:

If the temperature of the concrete mix exceeds + 15°C, it is possible to reduce the pressure by 3 % for each °C, with a maximum reduction of 30 % when the temperature of mix is more or less constant.

If the temperature is less that + 15 °C, one should increase the pressure by 3% for each °C.

External temperature effect:

The effect of an outside temperature under +15°C is not considered if special measures are implemented to reduce the thermal effect by isolation cover.

If no insulation protection is used, the effect should be taken only if the outside temperature can modify the temperature of the mix during the hardening phase.

Effect of retardant:

In case of use of retardant agents, the pressure *Pm* should be multiplied by the factor given hereafter.

Workability	Abraham cone in cm	Factor to affect *Pm*	
		Concrete delayed 5 h	Concrete delayed 15 h
Dry	0 – 2	1.15	1.45
Plastic	3 – 5	1.25	1.80
Soft – Fluid	6 – 15	1.40	2.15
This table is valid for a height of concrete of 10 meters. A linear interpolation is possible if necessary.			

External vibration

In the vibration-affected area, the hydrostatical law should be used.

A.2.3 Recommendation of the Spanish: "Instituto Eduardo Torroja"

This study gives pressures on four zones:

1. A zone of hydrostatical pressure.
2. A zone of transition.
3. A zone of granular pressure.
4. A zone of constant maximum pressure.

The theory introduces the granular pressure zone and a transition zone (see Fig. A-5).

Copyright fib, all rights reserved. This PDF copy of fib Bulletin 48 is intended for use and/or distribution only within National Member Groups of fib.

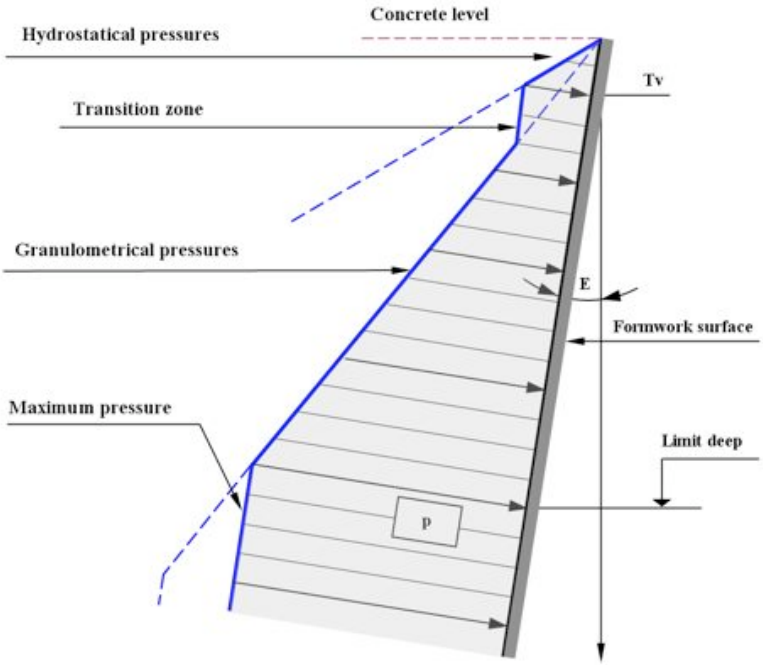

Fig. A-5. Pressures on sloped formwork.

Granular pressures can be analyzed with ground pressures formulas (see paragraph A.1.4). The internal friction angle (*b*) can be estimated with the following formula where "α" is the slump of the concrete in millimetres:

$$\tan(b) = \frac{260 - \alpha}{1400}$$

The maximum limit depth is limited by the "silo effect" or the hardness of the concrete. The first one is estimated by:

$$He = 21 \cdot 10^3 \cdot \frac{43 - T}{(165 - a) \cdot (303 + a)} \cdot \frac{S}{1 + \Gamma}$$

where:

He: limit depth in meters

T: setting temperature in ºC

α: concrete slump in millimeters

Γ: thickness / transversal length considered

S: thickness in meters

Copyright fib, all rights reserved. This PDF copy of fib Bulletin 48 is intended for use and/or distribution only within National Member Groups of fib.

The limiting depth is also limited by the setting time of the concrete:

$H_{en} = H_v + V\, t_{en}$

where:

V: rising speed of the concrete in m/h

H_{en}: limiting depth because concrete sets

t_{en}: setting time in hours

H_v: vibration depth in meters

$$t_{en} = \frac{70 + 0.3 \cdot \alpha - 2 \cdot T}{25 + T}$$

where:

α: Abrams's slump in millimeters

T: setting temperature in ºC

A.2.4 Study by N.J. Garner

The hydrostatical law of pressure is limited to the following value:

$$Pm = 2.4 \cdot hi + \frac{0.3 \cdot N}{S} + \frac{S}{0.4} + \frac{50\sqrt{V}}{18 + T} + \frac{\alpha - 75}{100}$$

where:

hi: vibration depth in meters

N: mechanical power of vibration in HP ≈1.75

S: thickness in meters

V: rising speed of fresh concrete in m/h

T: setting temperature of the concrete in °C

α: workability; slump of concrete in millimeters

The advantage of this formula is that it takes into account the dynamical action due to the vibration.

Copyright fib, all rights reserved. This PDF copy of fib Bulletin 48 is intended for use and/or distribution only within National Member Groups of fib.

A.3 Fresh concrete pressure for SCC

The formwork pressure depends on both material properties of SCC and the casting procedure: flow properties/ thixotropy/ cohesion, rate of vertical placement and the method of placement (from the top or from the bottom). Generally, full hydrostatic pressures should be applied for formwork/ falsework design. Deviations may occur: appropriate thixotropy may result in lower pressures, pumping from the bottom may lead to higher pressures near the entry point.

It is recommended that reduction relative to the hydrostatic pressure is only applied if justified by confirmation tests.

Copyright fib, all rights reserved. This PDF copy of fib Bulletin 48 is intended for use and/or distribution only within National Member Groups of fib.

Bibliography

AFNOR Association Française de Normalisation, *NF-P93-322 Poutrelles industrialisées pour l'étaiement et le coffrage,* December 1994. ("Joists industrialized for shoring and formwork", in French).

AFNOR. Association Française de Normalisation, *NF-P93-550 Tours d'étaiement métalliques à éléments préfabriqués,* December 1997. ("Towers for shoring prefabricated elements", in French).

American Concrete Institute, *ACI 347/78. Recommended Practice for Concrete Formwork,* 1978.

British Standard, *BS-5973. Code of practice for access and working scaffolds and special scaffold structures in steel*, 1993.

British Standard, *BS-5975. Code of practice for Falsework,* 1996.

British Standard, *BS-12811-1. Temporary work equipment*, 2003.

Calavera, José (Intemac). *Cálculo, construcción y patología de forjados de edificación,* 1988. ("Calculation, construction and pathology of building slabs", in Spanish).

Deutsches Intitut für Normung e.V. *DIN 18218. Rahmenschalungstafeln für vertikale Bauteile,* ("Pressure of fresh concrete on vertical formwork", in German).

European Committee for standardization EN 12811-1. *Temporary works equipment. Part 1. Scaffolds. Performance requirements and general design,* 2003.

European Committee for standardization EN 12811-2. *Temporary works equipment. Part 2: Information on materials,* 2004.

European Committee for standardization EN 12811-3. *Temporary works equipment. Part 3: Load testing,* 2002.

European Committee for standardization EN 12812. *Falsework – Performance requirements and general design,* 2004.

European Committee for standardization EN 12813. *Temporary works equipment – Load bearing towers of prefabricated components – Particular methods of structural design*, 2004.

European Committee for standardization EN 1065. *Adjustable telescopic steel props. Product specifications, design and assessment by calculation and tests,* 1999.

European Committee for standardization EN 1065. *Adjustable telescopic steel props. Product specifications, design and assessment by calculation and tests,* 1999.

European Committee for standardization EN 74-1988. *Couplers, spigot pins and baseplates for use in falsework and scaffolds. Couplers for tubes. Requirements and test procedures.*

European Committee for standardization ENV 1993-1-1-1996. *Design of steel structures. Part 1-1: General rules.*

Copyright fib, all rights reserved. This PDF copy of fib Bulletin 48 is intended for use and/or distribution only within National Member Groups of fib.

European Prestandard. Pr EN 1991-1-6. *Eurocode 1. Actions on Structures*, 2003.

Department of Transportation. Engineering Service Center. Division of Structure Construction. *Falsework Manual Holders*. 2001.

HSE. *Investigation into aspect of falsework. Contract Research Report 394/2001.*

Ministerio de Fomento EA-95. *Estructuras de acero en la edificación*, 1995 ("Steel structures for buildings", in Spanish).

Palanca, J. Martín. *Presiones del hormigón fresco*. Instituto Eduardo Torroja c.c. 1982. ("Pressures of fresh concrete", in Spanish).

Perrín, José Blanco, Departamento de Métodos de FCC. *Cimbras tubulares. Análisis y patología*. ("Tubular bracings. Analysis and pathology", in Spanish).

Self-Compacting Concrete European Project Group. *The European Guidelines for Self-Compacting Concrete, Specification, Production and Use.* 2005

Scoss topic paper. SC/T/02/01. *Falsework: full circle?,* 2002.

TMC. *Sostenimiento del Hormigón*, 1995. ("Support of concrete", in Spanish).

Copyright fib, all rights reserved. This PDF copy of fib Bulletin 48 is intended for use and/or distribution only within National Member Groups of fib.

fib Bulletins published since 1998

N°	Title
1	Structural Concrete – Textbook on Behaviour, Design and Performance; Vol. 1: Introduction - Design Process – Materials Manual - textbook (244 pages, ISBN 978-2-88394-041-3, July 1999)
2	Structural Concrete – Textbook on Behaviour, Design and Performance Vol. 2: Basis of Design Manual - textbook (324 pages, ISBN 978-2-88394-042-0, July 1999)
3	Structural Concrete – Textbook on Behaviour, Design and Performance Vol. 3: Durability - Design for Fire Resistance - Member Design - Maintenance, Assessment and Repair - Practical aspects Manual - textbook (292 pages, ISBN 978-2-88394-043-7, December 1999)
4	Lightweight aggregate concrete: Extracts from codes and standards State-of-the-art report (46 pages, ISBN 978-2-88394-044-4, August 1999)
5	Protective systems against hazards: Nature and extent of the problem Technical report (64 pages, ISBN 978-2-88394-045-1, October 1999)
6	Special design considerations for precast prestressed hollow core floors Guide to good practice (180 pages, ISBN 978-2-88394-046-8, January 2000)
7	Corrugated plastic ducts for internal bonded post-tensioning Technical report (50 pages, ISBN 978-2-88394-047-5, January 2000)
8	Lightweight aggregate concrete: Part 1 (guide) – Recommended extensions to Model Code 90; Part 2 (technical report) – Identification of research needs; Part 3 (state-of-art report) – Application of lightweight aggregate concrete (118 pages, ISBN 978-2-88394-048-2, May 2000)
9	Guidance for good bridge design: Part 1 – Introduction, Part 2 – Design and construction aspects. Guide to good practice (190 pages, ISBN 978-2-88394-049-9, July 2000)
10	Bond of reinforcement in concrete State-of-art report (434 pages, ISBN 978-2-88394-050-5, August 2000)
11	Factory applied corrosion protection of prestressing steel State-of-art report (20 pages, ISBN 978-2-88394-051-2, January 2001)
12	Punching of structural concrete slabs Technical report (314 pages, ISBN 978-2-88394-052-9, August 2001)
13	Nuclear containments State-of-art report (130 pages, 1 CD, ISBN 978-2-88394-053-6, September 2001)
14	Externally bonded FRP reinforcement for RC structures Technical report (138 pages, ISBN 978-2-88394-054-3, October 2001)
15	Durability of post-tensioning tendons Technical report (284 pages, ISBN 978-2-88394-055-0, November 2001)
16	Design Examples for the 1996 FIP recommendations *Practical design of structural concrete* Technical report (198 pages, ISBN 978-2-88394-056-7, January 2002)
17	Management, maintenance and strengthening of concrete structures Technical report (180 pages, ISBN 978-2-88394-057-4, April 2002)

Copyright fib, all rights reserved. This PDF copy of fib Bulletin 48 is intended for use and/or distribution only within National Member Groups of fib.

N°	Title
18	Recycling of offshore concrete structures State-of-art report (33 pages, ISBN 978-2-88394-058-1, April 2002)
19	Precast concrete in mixed construction State-of-art report (68 pages, ISBN 978-2-88394-059-8, April 2002)
20	Grouting of tendons in prestressed concrete Guide to good practice (52 pages, ISBN 978-2-88394-060-4, July 2002)
21	Environmental issues in prefabrication State-of-art report (56 pages, ISBN 978-2-88394-061-1, March 2003)
22	Monitoring and safety evaluation of existing concrete structures State-of-art report (304 pages, ISBN 978-2-88394-062-8, May 2003)
23	Environmental effects of concrete State-of-art report (68 pages, ISBN 978-2-88394-063-5, June 2003)
24	Seismic assessment and retrofit of reinforced concrete buildings State-of-art report (312 pages, ISBN 978-2-88394-064-2, August 2003)
25	Displacement-based seismic design of reinforced concrete buildings State-of-art report (196 pages, ISBN 978-2-88394-065-9, August 2003)
26	Influence of material and processing on stress corrosion cracking of prestressing steel – case studies. Technical report (44 pages, ISBN 978-2-88394-066-6, October 2003)
27	Seismic design of precast concrete building structures State-of-art report (262 pages, ISBN 978-2-88394-067-3, January 2004)
28	Environmental design State-of-art report (86 pages, ISBN 978-2-88394-068-0, February 2004)
29	Precast concrete bridges State-of-art report (83 pages, ISBN 978-2-88394-069-7, November 2004)
30	Acceptance of stay cable systems using prestressing steels Recommendation (80 pages, ISBN 978-2-88394-070-3, January 2005)
31	Post-tensioning in buildings Technical report (116 pages, ISBN 978-2-88394-071-0, February 2005)
32	Guidelines for the design of footbridges Guide to good practice (160 pages, ISBN 978-2-88394-072-7, November 2005)
33	Durability of post-tensioning tendons Recommendation (74 pages, ISBN 978-2-88394-073-4, December 2005)
34	Model Code for Service Life Design Model Code (116 pages, ISBN 978-2-88394-074-1, February 2006)
35	Retrofitting of concrete structures by externally bonded FRPs. Technical Report (224 pages, ISBN 978-2-88394-075-8, April 2006)
36	2006 *fib* Awards for Outstanding Concrete Structures Bulletin (40 pages, ISBN 978-2-88394-076-5, May 2006)
37	Precast concrete railway track systems State-of-art report (38 pages, ISBN 978-2-88394-077-2, September 2006)

Copyright fib, all rights reserved. This PDF copy of fib Bulletin 48 is intended for use and/or distribution only within National Member Groups of fib.

N°	Title
38	Fire design of concrete structures – materials, structures and modelling State-of-art report (106 pages, ISBN 978-2-88394-078-9, April 2007)
39	Seismic bridge design and retrofit – structural solutions State-of-art report (300 pages, ISBN 978-2-88394-079-6, May 2007)
40	FRP reinforcement in RC structures Technical report (160 pages, ISBN 978-2-88394-080-2, September 2007)
41	Treatment of imperfections in precast structural elements State-of-art report (74 pages, ISBN 978-2-88394-081-9, November 2007)
42	Constitutive modelling of high strength / high performance concrete State-of-art report (130 pages, ISBN 978-2-88394-082-6, January 2008)
43	Structural connections for precast concrete buildings Guide to good practice (370 pages, ISBN 978-2-88394-083-3, February 2008)
44	Concrete structure management: Guide to ownership and good practice Guide to good practice (208 pages, ISBN 978-2-88394-084-0, February 2008)
45	Practitioners' guide to finite element modelling of reinforced concrete structures State-of-art report (344 pages, ISBN 978-2-88394-085-7, June 2008)
46	Fire design of concrete structures — structural behaviour and assessment State-of-art report (214 pages, ISBN 978-2-88394-086-4, July 2008)
47	Environmental design of concrete structures – general principles Technical report (48 pages, ISBN 978-2-88394-087-1, August 2008)
48	Formwork and falsework for heavy construction Guide to good practice (96 pages, ISBN 978-2-88394-088-8, January 2009)

Abstracts for *fib* Bulletins, lists of available CEB Bulletins and FIP Reports, and an order form are available on the *fib* website at www.fib-international.org/publications.